# ACCESSORY

## Grass Drill Transport Trailer

## Operation, Maintenance, and Parts Manual



DO NOT OPERATE THIS EQUIPMENT UNTIL THIS MANUAL HAS BEEN READ AND UNDERSTOOD.

Part Number:
13500016 Original
Instructions

# Serial Number and Product-Specific Information

- The grass drill serial number can be found at the location shown below.
- Always give the dealer the serial number on the grass drill trailer when ordering parts, requesting service, or requesting other information.
- Please record the information in the table below for easy reference.

| | | | | | |
|---|---|---|---|---|---|
| Model Number | | Serial Number | | | |
| Date of Purchase | | | | | |
| Dealer | | Dealer Phone Number | | | |
| City | | State | | Zip | |



# Contents


Serial Number and Product-Specific Information ..... 3

**Safety** ..... 6

Safety Alert Symbol and Signal Words ..... 6

General Safety Information ..... 6

Grass Drill Trailer Acceptable Use ..... 6

Safety Decals ..... 7

Safety Decals and Other Decals Identification and Locations ..... 7

Before Transporting or Operating ..... 8

Transport Safety ..... 9

SIS Signs ..... 9

Working On or Near This Grass Drill Trailer ..... 10

Wear Personal Protective Equipment ..... 12

Prepare for Emergencies ..... 13

**Operation** ..... 14

Operating Safety ..... 14

Grass Drill Trailer Features ..... 15

Grass Drill Trailer Specifications ..... 16

Inspecting the Grass Drill Trailer Before Transport Operation ..... 16

Hitching and Unhitching the Grass Drill Trailer ..... 17

Moving the Tow Vehicle Into Position ..... 17

Hitching the Trailer to the Tow Vehicle ..... 17

Unhitching the Trailer From the Tow Vehicle ..... 18

Preparing the Jack for Transport ..... 18

Transport Operation ..... 19

Staying Safe on Inclines ..... 20

Loading the Grass Drill Onto the Grass Drill Trailer ..... 20

Unloading the Grass Drill From the Grass Drill Trailer ..... 24

Collapse the Grass Drill Trailer for Transport or Storage ..... 28

**Maintenance** ..... 30

Maintenance Safety ..... 30

Storing the Grass Drill Trailer ..... 30

Securing the Grass Drill Trailer for Maintenance ..... 31

Grass Drill Trailer Support Points ..... 31

Bolt Torque ..... 32

Maintenance Schedule ..... 32

Lubrication Points and Schedule ..... 33

**Replacements and Parts** ..... *34*
Replacement and Parts Safety ..... *34*
Replacing a Wheel ..... *35*
Removing a Wheel ..... *35*
Installing a Wheel and Applying Correct Lug Nut Torque ..... *35*
Replacing Wheel and Tire Assemblies ..... *36*
Axle Assembly, Hub Assemblies, and Lug Nuts ..... *37*
Grass Drill Trailer Hardware, Jack, and Small Components ..... *38*
Grass Drill Ramp Assembly and Wheel Stop/Chock Components ..... *39*
**Troubleshooting** ..... *40*
**Quick Reference Index** ..... *41*

# Safety

## Safety Alert Symbol and Signal Words



- This safety alert symbol indicates an important safety message in this manual.
- When you see this symbol, be alert to the possibility of injury or death.

**Signal Words:** Be aware of the signal words **DANGER**, **WARNING**, **CAUTION**, and **NOTICE**. These signal words indicate a level of safety risk.

**DANGER** Indicates extremely imminent hazards where death or serious injury will result if these hazards are not avoided.

**WARNING** Indicates hazards at hand where death or serious injury likely could occur if these hazards are not avoided.

**CAUTION** Indicates hazards at hand where personal injury likely may occur if these hazards are not avoided.

***NOTICE*** Used to convey important information that is not related to personal safety, such as maintenance, cleaning guidelines, avoiding implement damage, and the like.

GS-0001

## General Safety Information



All safety information in this manual is essential and is intended to assist in identifying and preventing incidents that could cause injury, death, or property damage. *Read, understand, and follow this manual and all safety instructions before operating, maintaining, or working near this equipment.*

- **Safety is your responsibility.** As the owner, operator, or supervisor you need to know and be alert to the specific requirements, precautions, and hazards that exist and to make these known to all personnel working with the equipment or in the equipment area, so they too may take any necessary safety precautions that may be required.
- **Prevent accidents by anticipating the result before the accident is caused.** As an owner, operator, or supervisor you are responsible.
- **Allow only experienced personnel to operate this equipment.** Operators need to be trained and familiar with this type of equipment.
- **Never use the equipment for purposes or applications it is not designed for.**
- **Never use any equipment that is damaged or has become unsafe.**

GS-0000

## Grass Drill Trailer Acceptable Use

The only acceptable use for the grass drill trailer is for transporting the grass drill. Using the grass drill trailer for any other purpose will void the grass drill trailer warranty.

SA-0005

# Safety Decals

- Read and follow all safety decals on the trailer and transported implement.
- Ensure all safety decals/signs are present in each designated location, and install new decals if any are missing or unreadable.
- Ensure replacement parts display the same safety decals.
- Contact Strobel Manufacturing to obtain free replacement safety decals.

SA-0005

## Safety Decals and Other Decals Identification and Locations

| | |
|---|---|
| (A) 2 5/16 Ball Hitch Only, PN 04021000<br> | (B) Reflector Strip<br> |
| (C) Grease Point, 04078007<br> | |

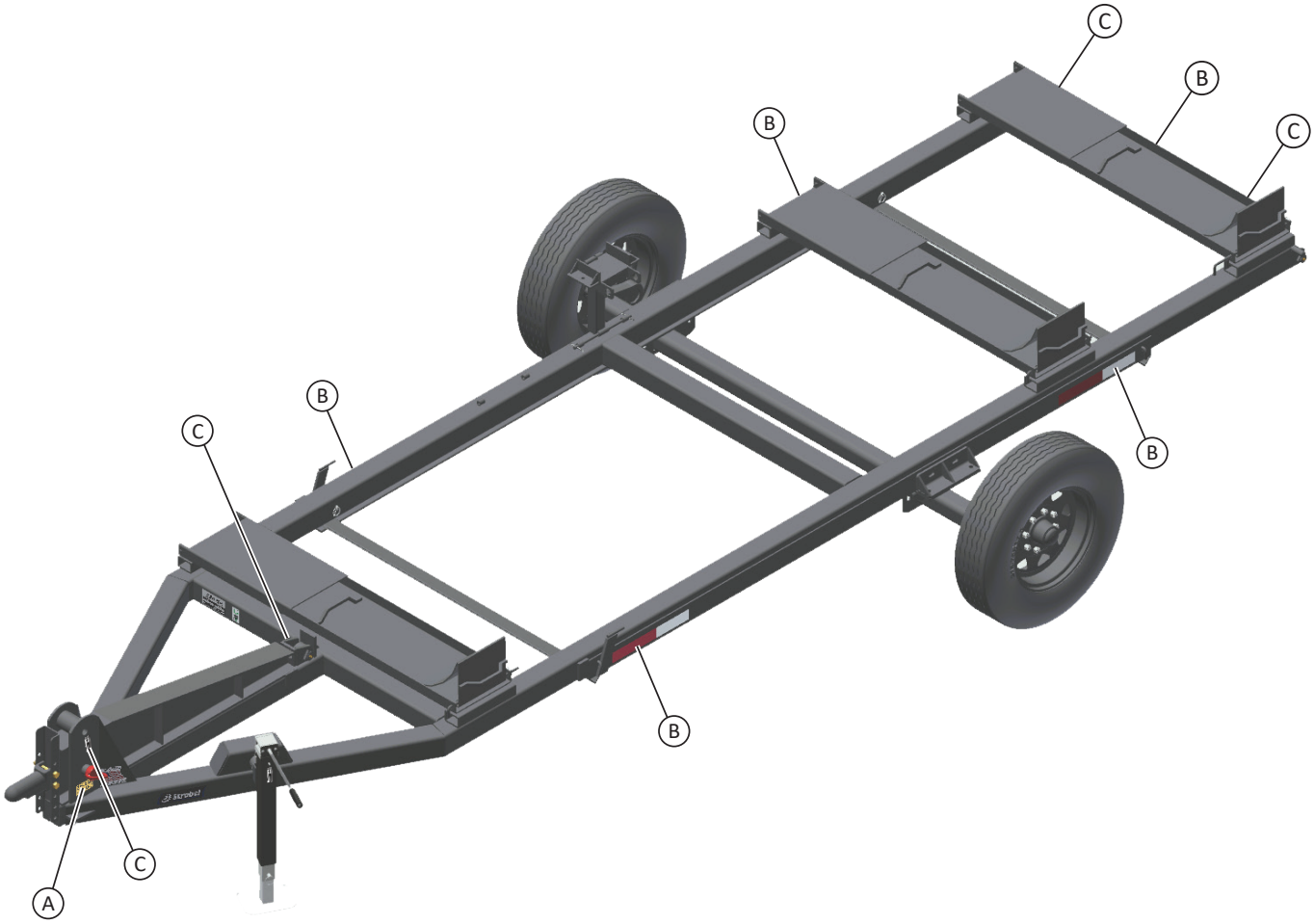

# Before Transporting or Operating

**⚠ WARNING**



- Keep this manual readily accessible to all operators.
- Ensure all operators read and understand this manual before operating the trailer.
- Owners are responsible to train operators for safe transporting, operating, and drill loading/unloading.
- Know the trailer's components, operating characteristics, and limitations before use.



- Walk around the equipment and inspect it. Do not operate a trailer with missing parts or lug nuts.
- Check tire condition and make sure the tires have proper pressure.
- Keep all persons, animals, vehicles, buildings, and other obstacles clear of the trailer's path and work area. Prevent striking, crushing, or running over persons or obstacles.



- Never allow anyone to ride on or be on the trailer or transported implement.



- Keep children, untrained persons, bystanders, and animals clear of the trailer whenever it is operating, being hitched, serviced, parked, or moved.



- Always wear a seat belt. The equipment could accidentally overturn, strike an obstacle, or come to an abrupt stop. Wearing seat belts help reduce the chances of serious injury or death.
- Always follow all applicable operation safety instructions.
- Never allow anyone who is untrained or underage to drive the towing vehicle or to operate the equipment. Refer to the applicable laws and safety rules within the local jurisdiction. Some trailer and vehicle weight combinations may require additional licensing.



- Read, understand, and follow the tow vehicle operator's manual.
- Be familiar with safe towing practices, hitching procedures, loading requirements, inspection procedures, and emergency actions.
- Before each use, verify that the operator is physically and mentally fit to safely operate the tow vehicle and trailer combination. Do not operate the vehicle when impaired by alcohol, drugs, medication, fatigue, or distraction.
- Use only a properly rated towing vehicle with sufficient capacity to tow the loaded grass drill trailer.
- Know and comply with the tow vehicle and trailer GVWR, GCWR, hitch ratings, tire load ratings, and other applicable load limits. Never exceed the rated capacity of the tow vehicle, trailer, hitch, or tires. Refer to the tow vehicle owner's manual.
- Contact the manufacturer if any instruction or operating condition seems unclear to you.

BB-0008

## Transport Safety

**⚠ WARNING**



- Use safe driving techniques for snow, ice, and other road and weather conditions. Avoid driving with this equipment in the dark. Refer to the tow vehicle manual.
- Adhere to all applicable traffic and transport laws and regulations, including those pertaining to transport.
- Before transport, ensure the hitch is latched, safety chains are crossed and attached, the jack is fully retracted, the electrical connector is plugged in, and the tow vehicle has sufficient capacity to control and stop the loaded grass drill trailer. Use only the proper hitch ball and manufacturer-correct coupler.
- Ensure all required lights, reflectors, flags, signs, emblems, and other transport safety devices are installed and properly positioned. Ensure all transport lights and safety devices are operational and clearly visible from all sides of the equipment.
- Choose only safe roads and driving surfaces suitable for safe towing; reduce speeds if the road or ground is rough or uneven.
- Check clearances carefully and use caution when moving or operating the equipment around bridges, buildings, fences, ditches, and other obstacles.
- Do not pull or position the trailer along a slope greater than 15°.
- Do not exceed 55 mph when towing the loaded grass drill trailer. Reduce speed as conditions require.

TS-0009

## SIS Signs




- A Speed Identification Symbol (SIS) sign displayed on the rear of the trailer is recommended to indicate the trailer's maximum travel speed.

## Working On or Near This Grass Drill Trailer

**⚠ WARNING**



- Never work on or under the grass drill trailer unless it is securely positioned, blocked, and supported. When working under or around a raised trailer, ensure the trailer and its components cannot move, fall, or cause crushing injuries. Always use stable jacks that are properly rated for the load.

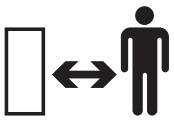

- Never allow anyone to be where they could be struck or run over by the equipment.



- During hitching and unhitching, keep yourself and all others clear of crush zones. Never allow anyone between the grass drill trailer and tow vehicle or between the equipment and any structure where they could be crushed or injured.
- Before performing maintenance or lubrication, shut off the tow vehicle. Park the trailer on a firm, level surface, keep it a safe distance from the tow vehicle, and secure it to prevent movement.



- Keep clothing, tools, hands, feet, and all other body parts clear of pinch points, shear points, crush points, moving parts, the hitch, hinges, and all other potential hazards.
- Never reach between components that could move unexpectedly.



- Tire blowout, rim failure, or explosive tire separation may cause injury or death. Only allow trained persons to service wheels and tires.



- Lubricants and grease are poisonous, known to cause cancer, and known to cause reproductive harm. Ingesting these petroleum products can kill.

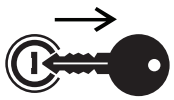

- Always shut off the tow vehicle and apply the parking brake before performing maintenance on this grass drill trailer.

**⚠ WARNING**



- Only allow trained personnel with proper equipment to maintain or service the tire and wheel assembly.

- Use only safe work practices, methods, and procedures.
- Ensure the grass drill trailer is free of unnecessary sharp edges, and be careful to avoid cuts from sharp edges.
- Always use the correct tools and equipment.
- Identify and assess hazards before beginning each task.
- Do not use damaged or unsafe equipment.
- Remove loose objects and unnecessary equipment from the work area.
- Report safety concerns, damaged components, or missing information to the owner or Strobel Manufacturing.

## Wear Personal Protective Equipment

**⚠ CAUTION**



- Wear close-fitting clothing and appropriate personal protective equipment (PPE) for each task.
- Wear appropriate eye protection when exposed to flying particles or other eye hazards.



- Wear slip-resistant, steel-toed footwear when operating or working around the equipment.



- Wear hearing protection whenever noise levels may cause hearing damage.
- Maintain full hearing awareness. Do not wear earbuds, headphones, or other devices that could impair hearing while driving, spotting, or assisting the driver.



- Wear protective gloves when handling pins, ramps, sharp components, or other objects that could cause injury.



- Wear high-visibility clothing whenever assisting with trailer, grass drill, or tow vehicle operations, or whenever you are within the work area.

- Secure long hair and remove loose or dangling jewelry and accessories.

PP-0002

## Prepare for Emergencies

**⚠ CAUTION**



- Keep a properly stocked first aid kit readily available.



- Keep a properly charged fire extinguisher readily available.




- Keep an emergency contact list for medical, fire, and rescue services nearby and on your phone.
- Know your location and be prepared to provide clear directions when requesting emergency assistance.

GS-0003

# Operation

## Operating Safety

**⚠ WARNING**

*Read, understand, and follow all safety instructions in this manual, on the safety decals, and in the tow vehicle manual before operating the grass drill trailer. Always follow all safety instructions.*

- Stay alert to, identify, and assess hazards before and during operation. Stop immediately if an unsafe condition exists.
- Keep children, bystanders, animals, objects, and obstacles clear of the equipment, work area, and travel path. Prevent striking, crushing, or running over persons, animals, or obstacles.
- Ensure the tow vehicle brakes are functioning properly before moving the tow vehicle and trailer on slopes or inclines.
- During hitching, unhitching, loading, unloading, and transport, keep all persons clear of pinch, crush, and collision hazards. Never allow anyone between the tow vehicle and trailer or between the equipment and a structure unless both are secured against movement.
- Operate, transport, load, and unload the equipment only from the tow vehicle driver's seat. Before leaving the driver's seat, park safely, shut off the tow vehicle, place it in park, and remove the key.
- Travel only at speeds that allow safe control of the tow vehicle and trailer. Adjust speed and driving practices appropriately for weather, road, visibility, and other conditions. Avoid operating in darkness whenever possible. At all times, maintain control of the equipment.
- Maintain safe clearance from power lines, electrical equipment, structures, obstructions, ditches, and other hazards.
- Use a qualified assistant who understands the procedures, hazards, and established communication signals during hitching, unhitching, loading, unloading, extending, and retracting the grass drill trailer. Ensure the assistant remains a safe distance from the equipment whenever movement is possible. Establish clear hand or other communication signals and stop immediately if communication is lost.

OP-0010

# Grass Drill Trailer Features

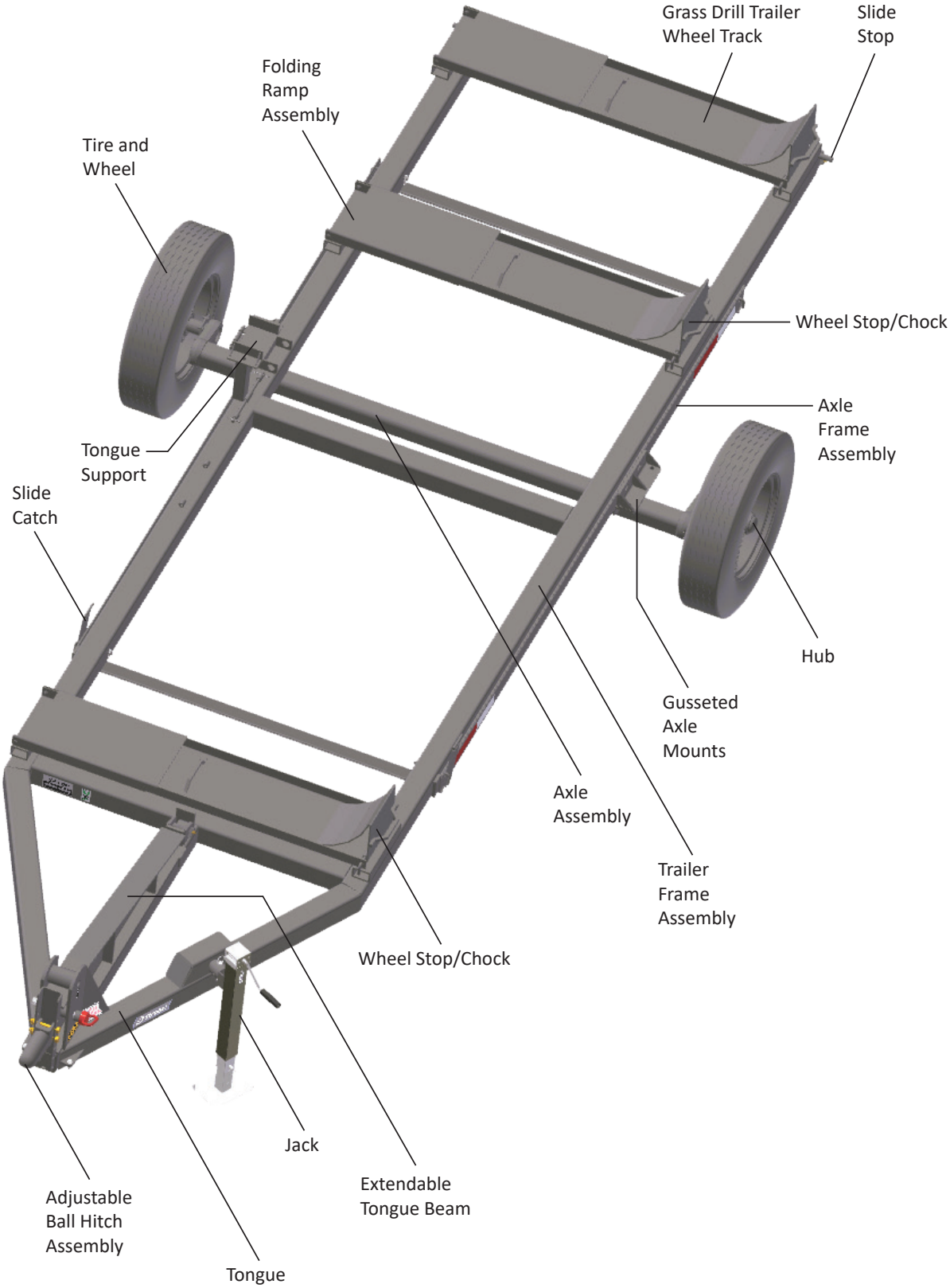

# Grass Drill Trailer Specifications

| Specification Description | Grass Drill Trailer Specification |
|---|---|
| Trailer Weight | 1851 lb |
| Trailer Transport Width | 103” |
| Trailer Transport Length | 248-1/2” |
| Trailer Fully Extended Length | 368-1/8” |
| Wheel Type | 16” Dia. × 6” Width, 8-Bolt (8 on 6.5” Bolt Pattern) |
| Lug Nut Size | 1/2” Dia. - 20 Threads/Inch |
| Tire Size | 235/80R16 |
| Axle Type | 7,000 lb 45 Down 8-Bolt Torsion Axle |
| Grass Drill Trailer Hitch Type | 2-5/16” Ball Hitch Only |
| **Jack Capacity** | 7,000 lb |

# Inspecting the Grass Drill Trailer Before Transport Operation

**⚠ WARNING**

- Perform the checks in this manual section before operating or transporting.
- Before inspecting or connecting the tow vehicle and grass drill trailer, shut off the tow vehicle, apply the parking brake, and ensure the tow vehicle and trailer are completely immovable. Then inspect the grass drill.
- Ensure the grass drill trailer hitch, locking mechanisms, and tie-downs are securely in place, ready for towing.
- Ensure lug nuts are tight and properly torqued. Improperly torqued trailer lug nuts can cause a loss of trailer control potentially leading to injury, death, or damaged equipment. See lug nut torque on page 35.

**Properly inspect the grass drill trailer and tow vehicle.**

- Inspect the trailer frame, tongue, hitch, ramps, hinges, wheel stops/chocks, welds, suspension, wheels, hub assemblies, and tires for damage or unsafe conditions. Replace worn or damaged parts and correct unsafe conditions before transport or operation.
- Ensure all grease points are lubricated, all hardware is present and properly tightened, and tires are properly inflated to the psi specified on the tire sidewall. Ensure tires are free of damage or deformation.
- Use a tow vehicle with adequate weight, power, brakes, and control for safe towing. Follow the tow vehicle owner’s manual and towing limitations.
- Ensure the tow vehicle brakes operate properly and that the hitch connection, safety chains, wheels, tow vehicle lights, and trailer lights (if equipped) are secure and functional.
- Ensure the grass drill is properly loaded and fully secured. Proper loading and securing helps prevent trailer sway. Ensure all required lights, reflectors, flags, and safety signs are installed and functioning properly.
- Walk completely around the tow vehicle, trailer, and load before transport to verify everything is properly connected, secured, and ready for travel.

# Hitching and Unhitching the Grass Drill Trailer

**⚠ WARNING**

- When hitching or unhitching, and whenever anyone is between the tow vehicle and trailer, ensure both are on a firm, level surface, stationary, and secured to prevent movement.
- Keep assistants and bystanders clear of the tow vehicle and trailer whenever either is not secured against movement.
- Before exiting the tow vehicle, place it in park, apply the parking brake, shut off the engine, remove the key, and ensure the vehicle cannot move.

## Moving the Tow Vehicle Into Position

**Important**
For maximum safety, use a qualified spotter. Always use a qualified spotter when hazards are present or when the operator cannot clearly see the trailer, hitching area, or travel path.

1. Raise the grass drill trailer coupler above the tow vehicle hitch ball.
2. Using clear hand signals, have an assistant guide the operator while slowly reversing the tow vehicle toward the trailer hitch.
3. Back up the tow vehicle at the lowest idle speed.
4. Once the tow vehicle and trailer are aligned for hitching, place the tow vehicle in park, apply the parking brake, shut off the engine, remove the key, and exit the vehicle.

## Hitching the Trailer to the Tow Vehicle

**Important**
- Connect the trailer to the tow vehicle only on a firm, level, well-lit surface clear of bystanders and operating equipment.
- Before moving, ensure all persons, animals, objects, and obstacles are clear of the tow vehicle and trailer path.

1. Raise the trailer tongue.
2. Align the tow vehicle and slowly reverse until the hitch ball is positioned beneath the trailer coupler.
3. Lower the coupler fully onto the hitch ball and securely couple the trailer to the tow vehicle.
4. Apply the coupler locking mechanism and ensure the locking mechanism is properly functioning.
5. Connect the grass drill trailer electrical plug to the tow vehicle electrical receptacle (not supplied by Strobel Mfg).
6. Verify the connection by using the jack to raise the rear of the tow vehicle approximately 1 in. (25 mm). If the coupler is properly engaged, the tow vehicle will rise with the trailer.
7. Fully retract the jack and turn it 90° for transport.
8. Cross the safety chains beneath the coupler and securely attach them to the tow vehicle's approved attachment points. Adjust the chain slack to prevent dragging or binding during turns.
9. Confirm the trailer, whether loaded or unloaded, is approximately level after it is hitched to the tow vehicle.

## Unhitching the Trailer From the Tow Vehicle

**Important**

- Always lower the trailer jack onto a firm, level, stable surface. Place an adequate support pad beneath the jack when necessary. Ensure the trailer and grass drill (if loaded) remain stable during unhitching.

1. Park the tow vehicle and trailer on a firm, level surface.
2. Place the tow vehicle in Park, shut off the engine, and set the parking brake.
3. Ensure the towe vechicle and trailer are secured against movement.
4. Lower the trailer jack until it firmly supports the trailer tongue.
5. Disconnect the safety chains and release the coupler jack.
6. Raise the coupler off the hitch ball with jack and verify the trailer and tow vehicle are fully disconnected.
7. Slowly pull the tow vehicle away from the trailer.
8. Verify the trailer is stable and fully supported before leaving it unattended.

## Preparing the Jack for Transport

**Parked Position**

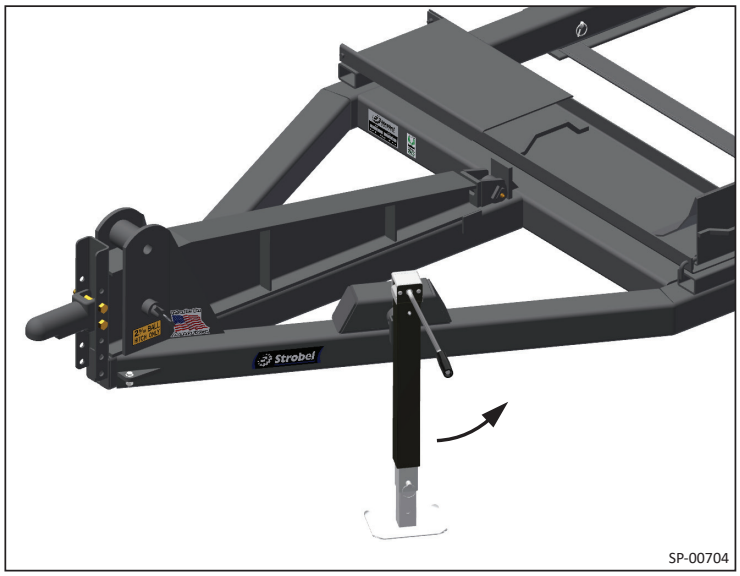


SP-00704

**Transport Position**

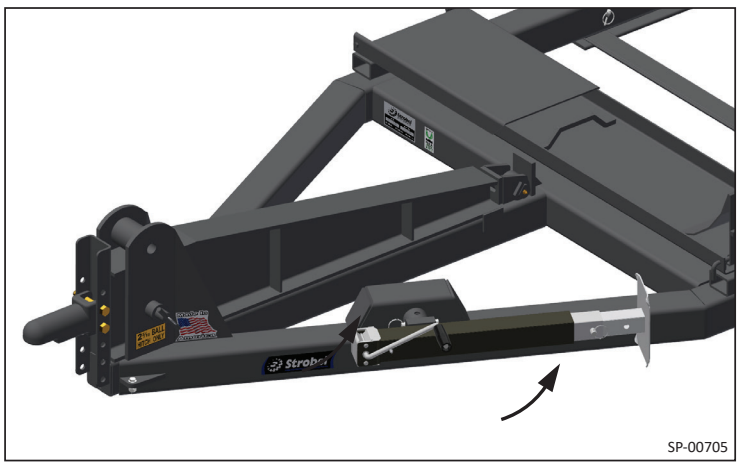


SP-00705

# Transport Operation

**⚠ WARNING**

- **Read and understand this entire manual, the tow vehicle manual, and all safety instructions before operating!**
- **Do not exceed 55 mph (88 km/h) Maximum Transport Speed or operate on slopes steeper than 15°.**
- Always protect your safety and the safety of others, including nearby motorists.
- Stay alert and plan ahead to avoid danger. Unexpected work situations, site/environment conditions can occur.
- Before towing, remove any dirt, mud, debris, or obstacles from the travel path.
- Before exiting the tow vehicle, place it in park, apply the parking brake, shut off the engine, remove the key, and ensure the vehicle cannot move.

**⚠ CAUTION**

Before transporting, inspect the grass drill trailer to ensure it is properly hitched, the grass drill is properly loaded, and all tie-downs are fully secure. Refer to pages 16–17.

- Comply with all applicable driving laws and regulations. Use flashing amber lights where required, and follow all tow vehicle operating instructions, including requirements for towing, tires, wheel settings, weight ratings, and equipment connections.
- Plan your route to avoid heavy traffic, low-capacity bridges, restricted side clearances, overhead and ground-level obstructions, and other road hazards. Do not cross bridges or structures that are not rated to support the Gross Combined Weight Rating (GCWR) of the tow vehicle and loaded grass drill trailer.
- Allow for the overall length, width, height, and weight of the loaded grass drill trailer when transporting. Yield to oncoming traffic at narrow bridges, narrow roads, and intersections.
- Follow speed limits and operate at a safe speed for weather, road, ground, and other conditions.
- Slow down before turns, curves, slopes, intersections, railroad crossings, and rough surfaces. Avoid sudden steering, acceleration, or braking that could cause sway, jackknifing, load movement, or rollover.
- Allow additional time and distance for braking, turning, merging, passing, and crossing traffic. Maintain full control of the tow vehicle and trailer, and use an appropriate gear on downhill grades to help control speed and reduce brake use.
- Verify the hitch, tires, chains, tie-downs, lights, and signals remain secure and functional throughout transport. Stop in a safe location to make adjustments or correct any problem.

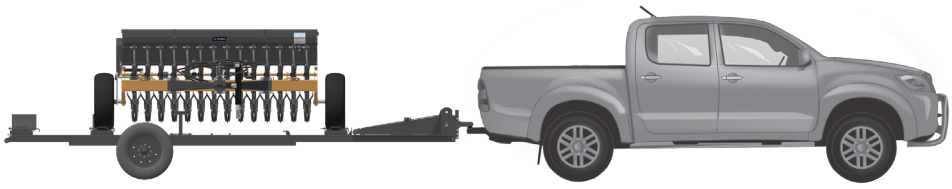

## Staying Safe on Inclines

**⚠ WARNING**

- Avoid operating on hazardous slopes, including those that are unsafe due to terrain, turns, poor weather, poor visibility, and any conditions that could cause rollover or tipping.
- Do not drive or position the grass drill trailer on slopes steeper than 15° or when slope conditions are unsafe.
- Do not allow the tow vehicle and grass drill trailer to roll downhill in neutral.
- Ensure brakes function properly before working on slopes.
- Always keep loads low, watch terrain/uneven surfaces, and avoid bouncing.

# Loading the Grass Drill Onto the Grass Drill Trailer

**⚠ WARNING**

Always keep spotters and all others clear of the equipment until the tow vehicle is parked, the parking brake is applied, the key is removed, and all vehicles and equipment are secured against movement.

1. Move the grass drill trailer onto a firm, level surface with plenty of space ahead and to the side for the loading operation.
2. Put the tow vehicle in park, apply the parking brake, shut off the engine, and exit the vehicle.

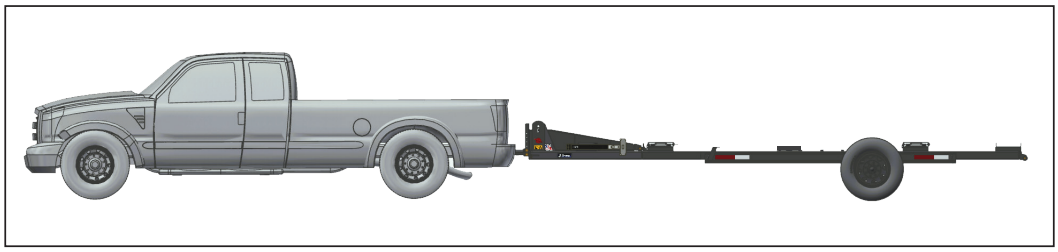

3. Remove the wheel stops/chocks from the grass drill trailer and use them to chock in front of both grass drill trailer tires.

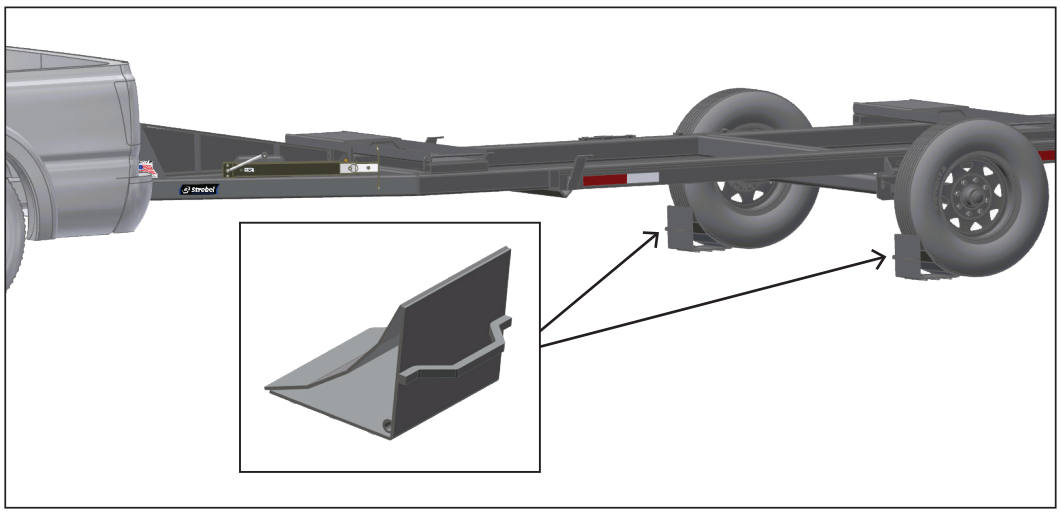

4. Remove the grass drill tongue pin and set it where you can find it later.
5. Pull cotter pins from axle frame L pins, and remove all four axle frame L pins. Keep these where you can find them.

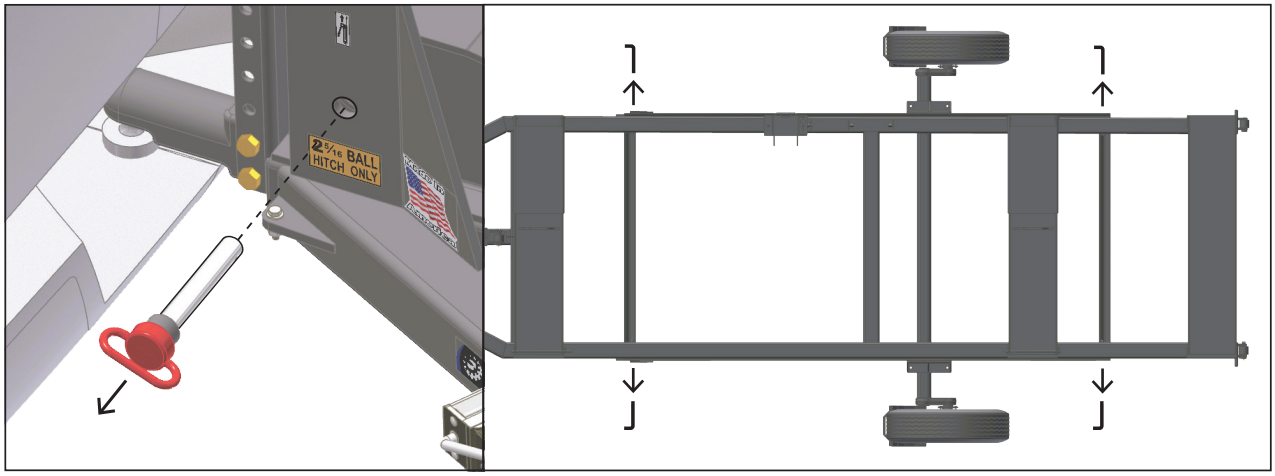


6. Start the tow vehicle and move it forward at idle speed to extend the grass drill trailer tongue, main frame, and axle frame assemblies.
7. Continue moving the tow vehicle very slowly forward until the grass drill trailer main frame fully rests on the ground.

**Important**
Stop pulling as soon as the trailer is fully extended. Do not drag the trailer and axle frames across the ground.

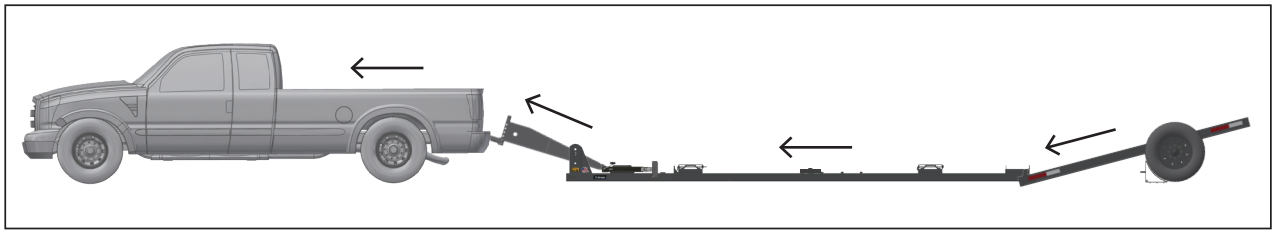

8. Ensure the grass drill tongue support is removed or folded down.

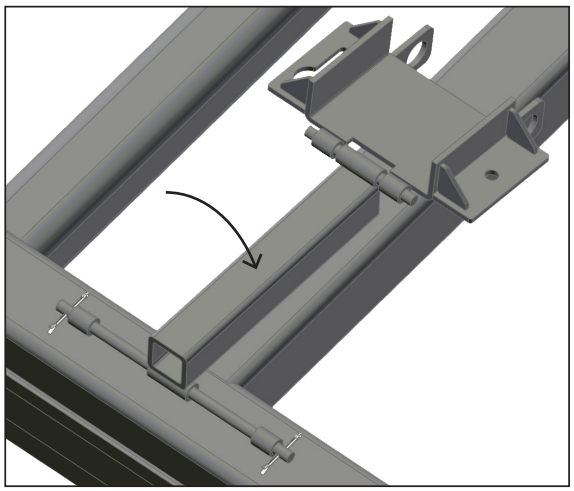

9. Fold out both ramps in preparation for loading the grass drill.

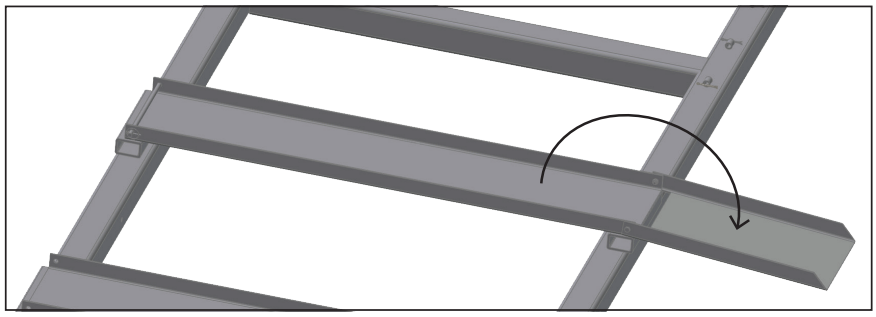

10. Keep the grass drill properly aligned and slowly move it onto the ramps into position on the trailer tracks for transport. Then fold up the ramps onto the trailer.

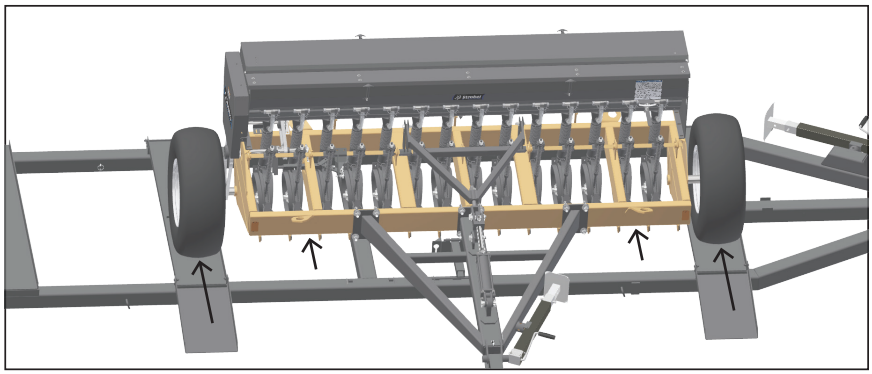

11. Lower the grass drill tongue onto the grass drill tongue support until the support carries the full weight of the tongue. Secure the support to the tongue with the chain so it cannot come loose, then unhitch the grass drill.

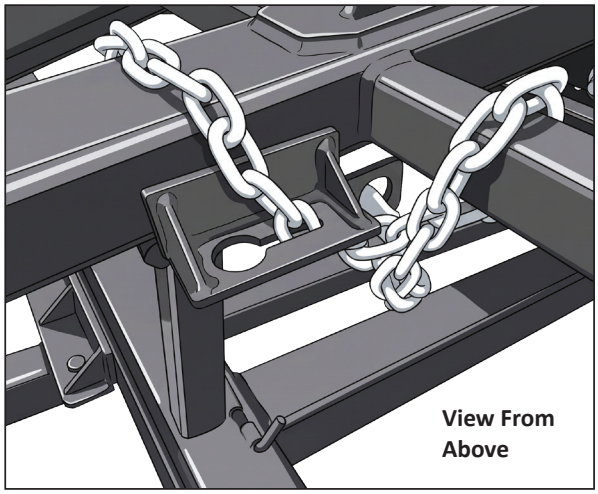


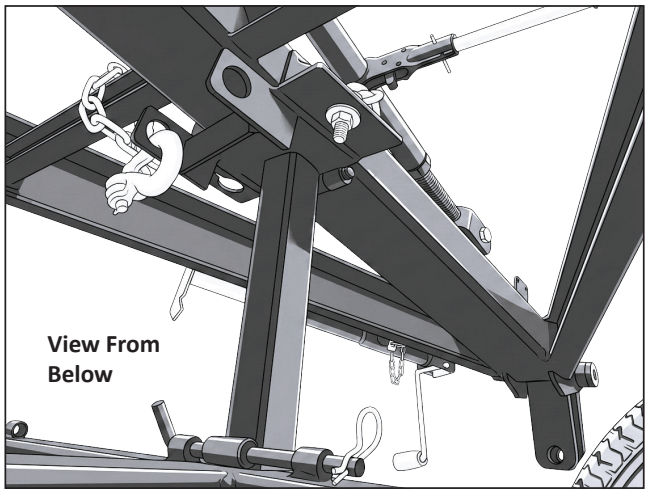

12. Reposition both grass drill trailer wheel stops/chocks to chock behind the grass drill trailer tires.

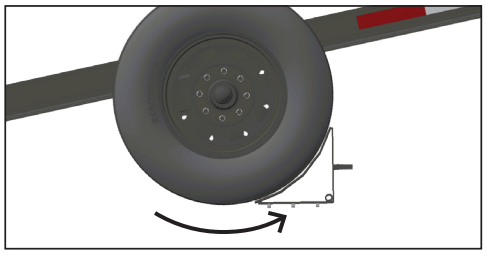

13. Begin slowly reversing the tow vehicle to retract and collapse the trailer.

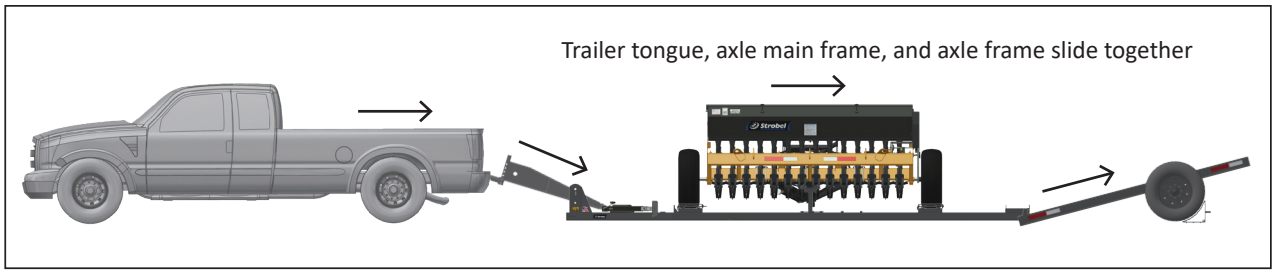


14. Continue reversing the tow vehicle until the grass drill trailer tongue and axle frame are in the transport position.

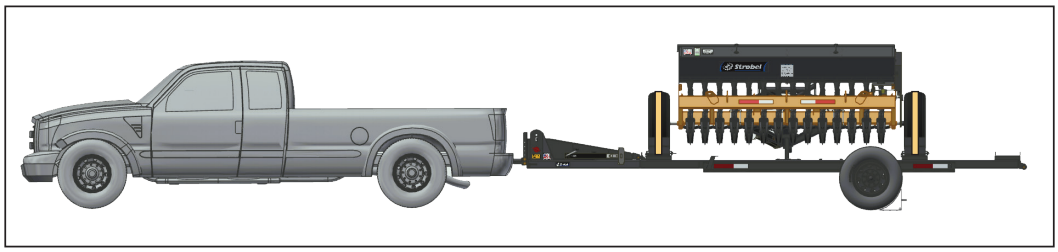

15. Reinstall the tongue pin and its cotter pin to lock the tongue into place and the four L pins and their cotter pins to lock the axle frame into place.

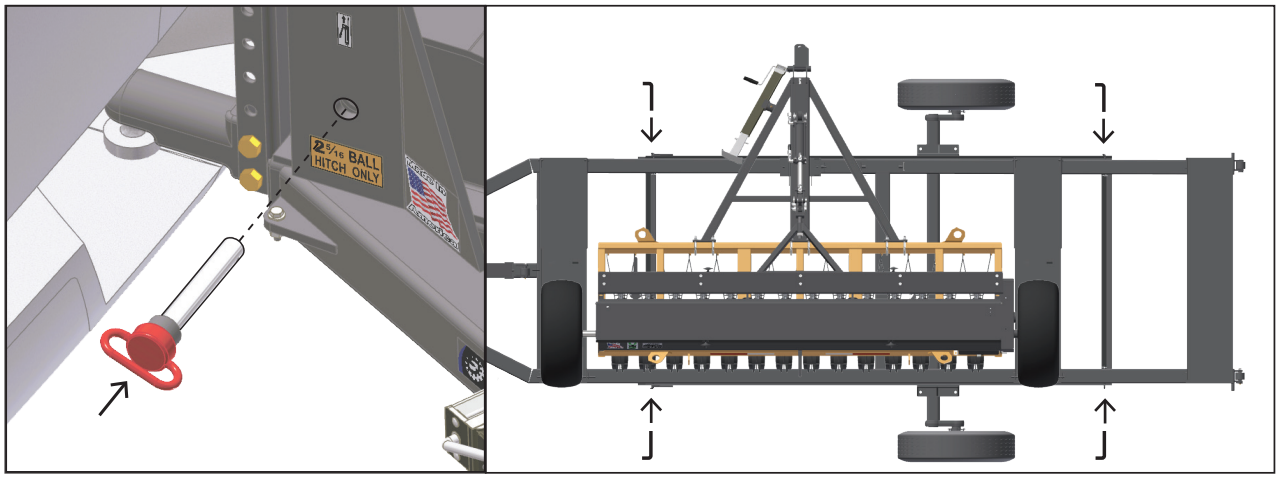

18. Return the wheel stops to the ends of the trailer wheel tracks and secure them with the wheel stop pins.

16. Securely ratchet down the tie-down straps over the tires so they cannot move.

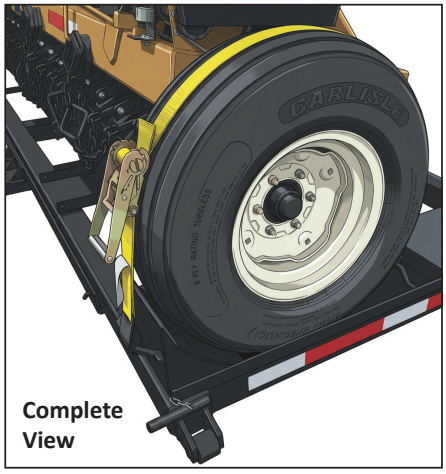


**Complete View**

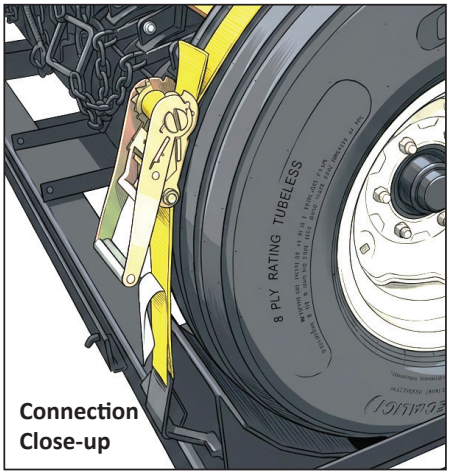


**Connection Close-up**

17. Ensure the trailer tow chains are properly cross connected to the tow vehicle, check the trailer and tow vehicle are ready for transport, and then transport the grass drill.

## Unloading the Grass Drill From the Grass Drill Trailer

**⚠ WARNING**

Always keep spotters and all others clear of the equipment until the tow vehicle is parked, the parking brake is applied, the key is removed, and all vehicles and equipment are secured against movement.

1. Move the grass drill trailer onto a firm, level surface with plenty of space ahead and to the side for the unloading operation.
2. Place the tow vehicle in park, apply the parking brake, shut off the engine, remove the key, and exit the vehicle.

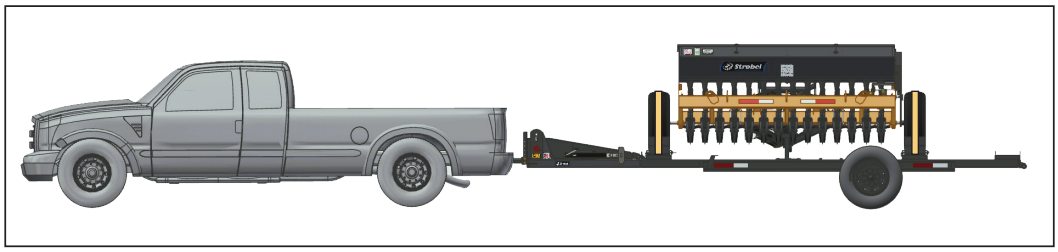

3. Remove the wheel stops from the grass drill trailer and use them to chock in front of both grass drill trailer tires.

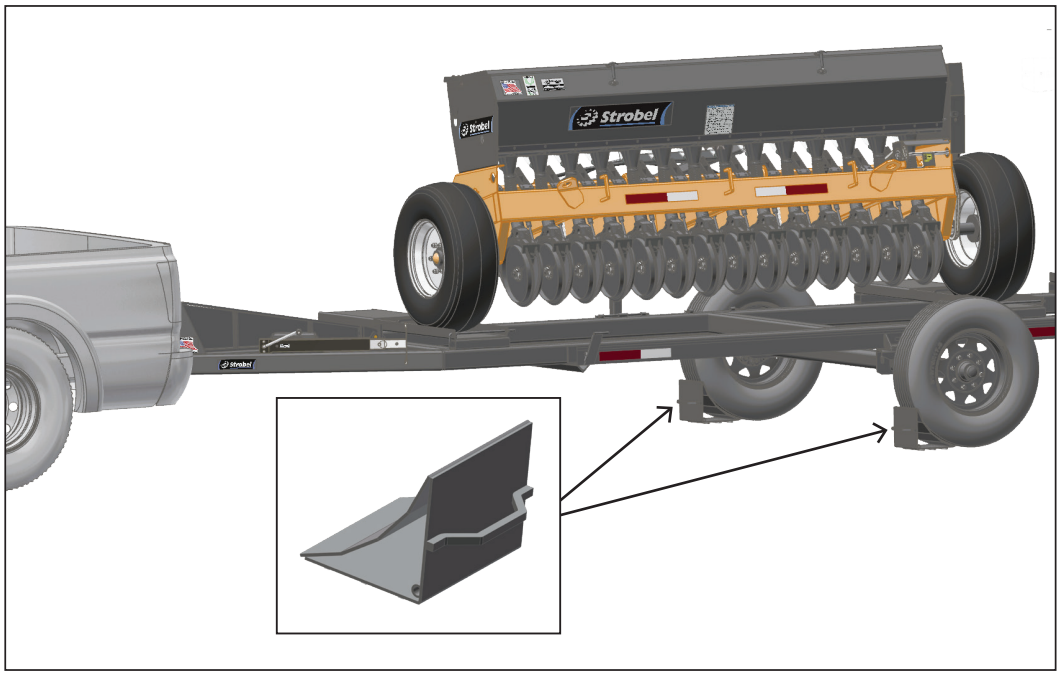


4. Remove the grass drill tongue pin and put it in a secure location where you will find it later.
5. Pull cotter pins from axle frame L pins, and remove all four axle frame L pins. Store these where you will find them.

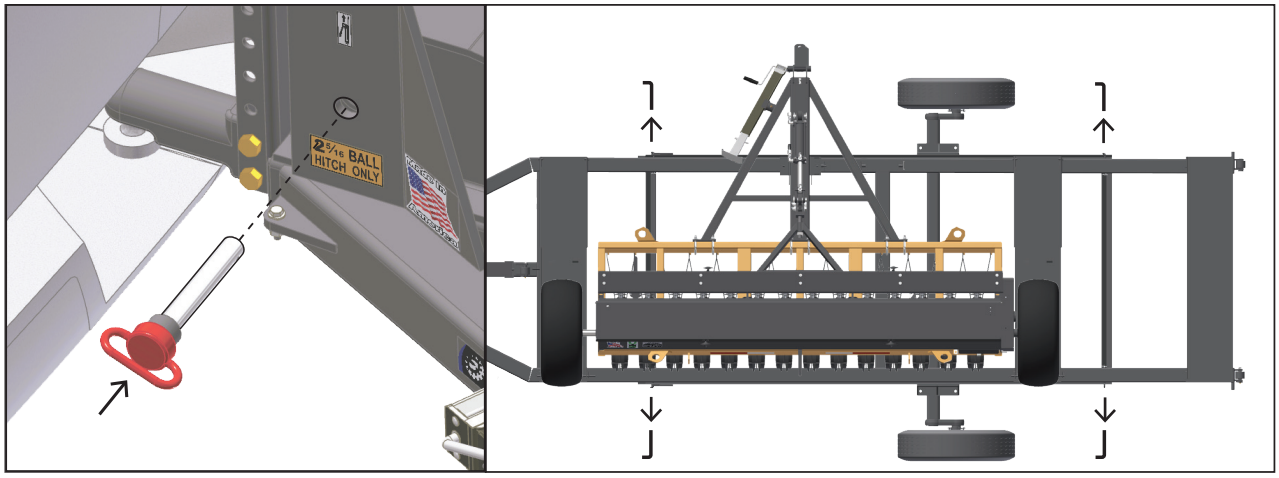

6. Start the tow vehicle and slowly move it forward to extend the trailer tongue, main frame, and axle frame. Pause as needed to prevent bouncing.
7. Continue moving the tow vehicle slowly forward until the grass drill trailer main frame fully rests on the ground.

   **Important**
   Stop pulling as soon as the trailer is fully extended. Do not drag the trailer and axle frames across the ground.

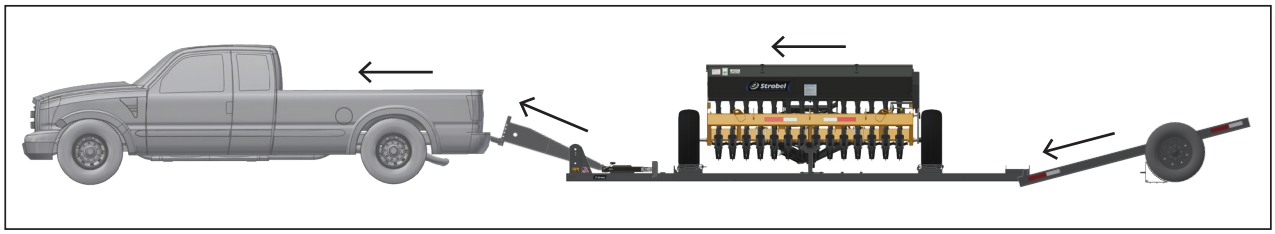

8. Fold out both ramps in preparation for unloading the grass drill.
9. Unstrap the wheels and store the ratchets and straps in a safe, secure location where you can find them later.

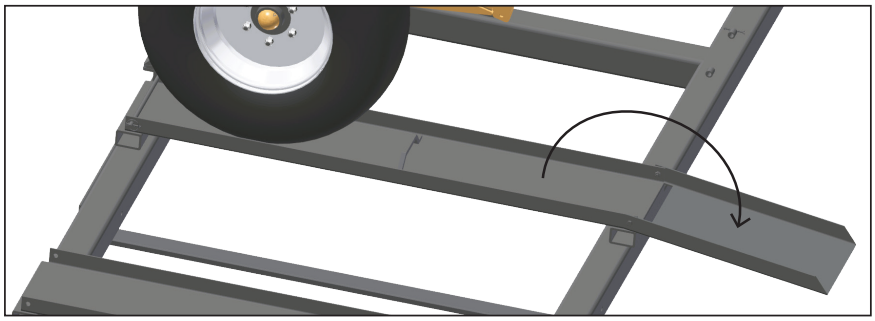

10. Hitch the grass drill to the tow vehicle.
11. Remove the grass drill tongue support chain from the grass drill tongue support.
12. Raise the grass drill tongue so it no longer rests on the tongue support.

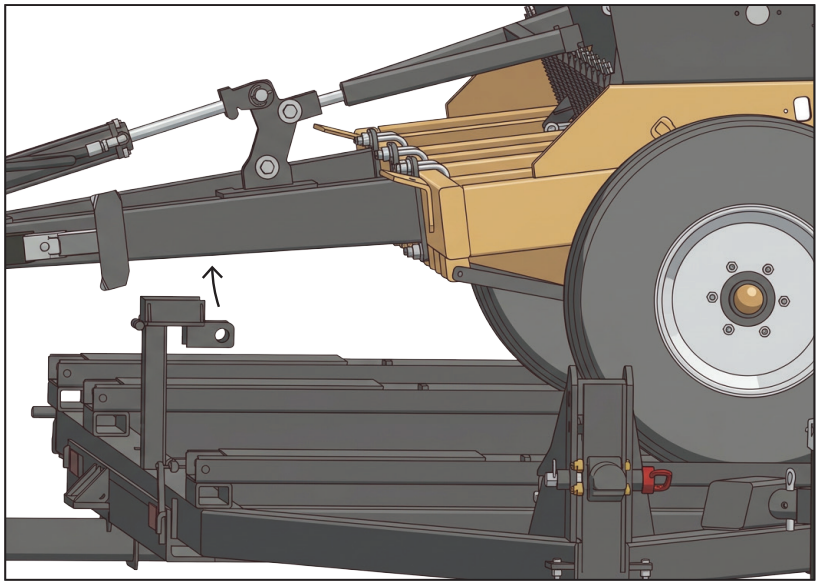

13. Fold down or remove the tongue support from the grass drill frame. If removed, store it securely out of the way where you can find it later.

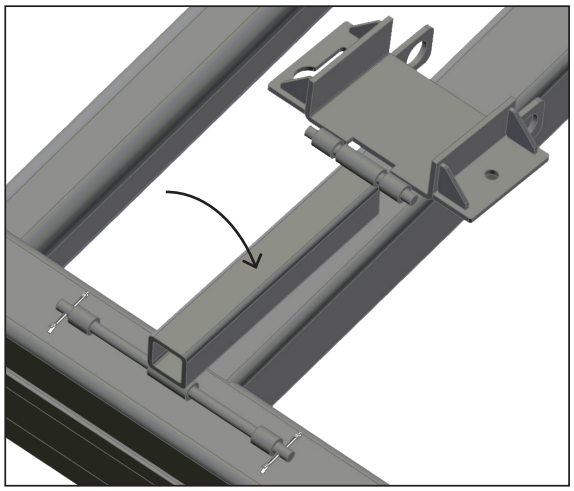

14. Slowly move the grass drill off the frame and down the ramps to unload it.

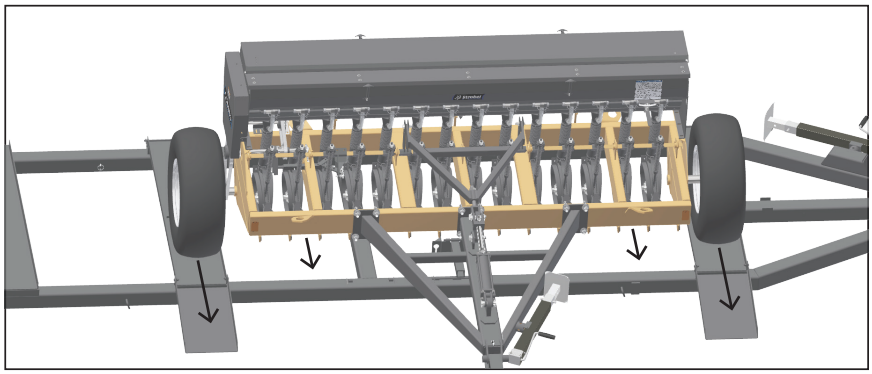

# Collapse the Grass Drill Trailer for Transport or Storage

**⚠ WARNING**

Always keep spotters and all others clear of the equipment until the tow vehicle is parked, the parking brake is applied, the key is removed, and all vehicles and equipment are secured against movement.

1. Fold up both grass drill trailer ramps.

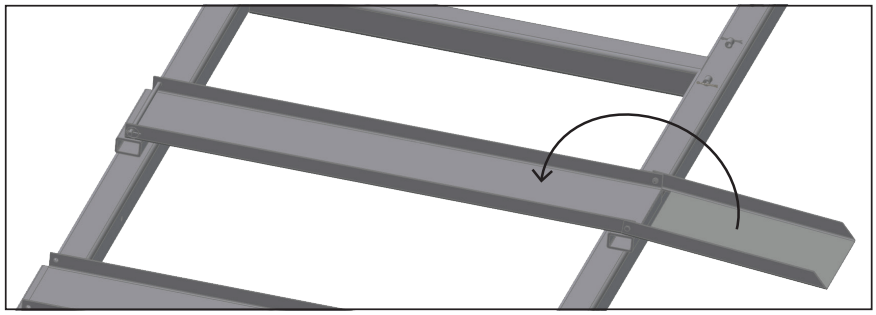

2. Place the trailer wheel stops/chocks behind both trailer tires to chock the wheels.

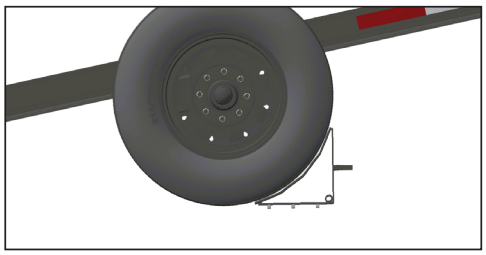

3. Hitch the grass drill to the tow vehicle.
4. Begin slowly reversing the tow vehicle to retract and collapse the trailer.

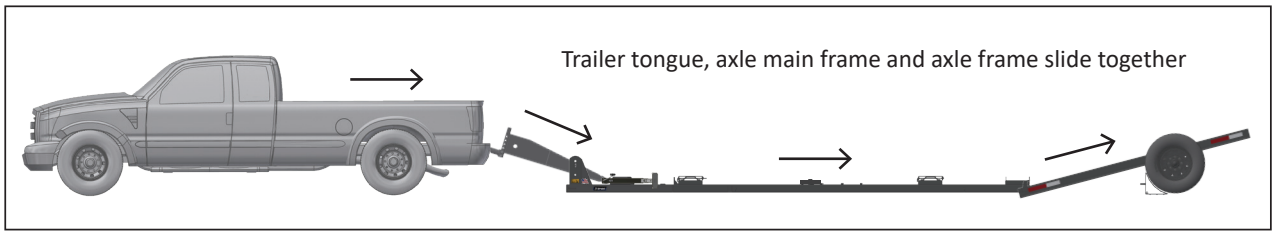


5. Continue reversing the tow vehicle until the grass drill trailer tongue and axle frame are in the transport position.

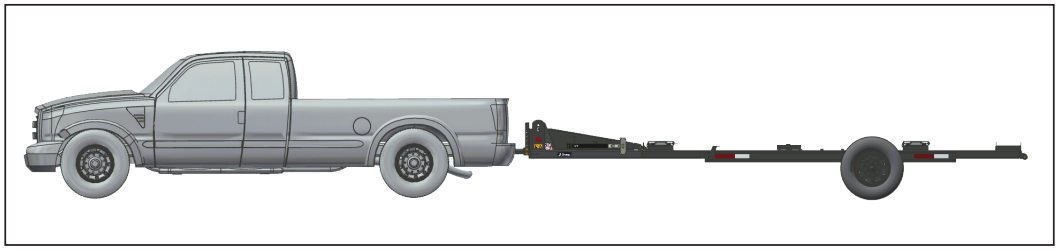

6. Install the tongue pin and cotter pin to secure the tongue in the transport position. Install all four axle-frame L-pins and cotter pins to secure the axle frame in the transport position.

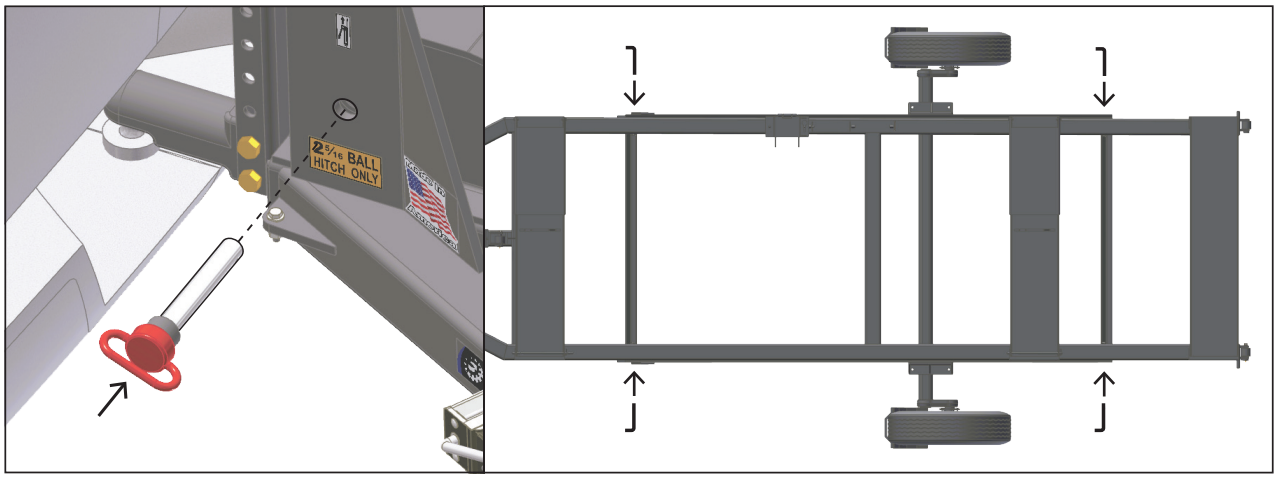


7. Return the wheel stops to the ends of the trailer wheel tracks and secure them.
8. Fold down the grass drill tongue support and securely fasten the support and chain to the trailer to prevent them from coming loose, falling off, or becoming lost.

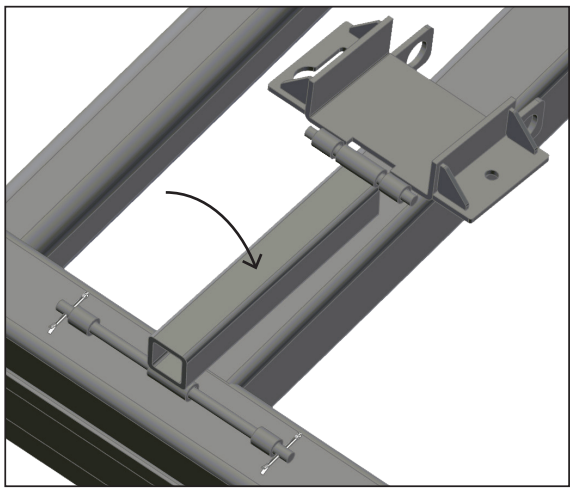

8. Secure the tie-down straps to the trailer where they cannot be lost or become entangled.
9. If towing, cross and connect the tow chains to the tow vehicle and secure all components and assemblies in the transport position.
10. Circle the equipment and inspect it to ensure it is ready for transport if transporting, or storage if storing.
11. If storing, move the grass drill trailer to a safe location on a firm, level surface, preferably indoors to help prevent corrosion. Unhitch the grass drill and disconnect the tow chains.

# Maintenance

## Maintenance Safety

**⚠ WARNING**

*Always follow all safety instructions.*

- Ensure the work area is clean, dry, level, and well lit.
- When lubricating or working on the grass drill trailer, ensure it is resting firmly on the ground. Ensure there is no possible way the trailer or any part of it can move.
- Before servicing, inspecting, adjusting, or lubricating the grass drill trailer, park on a firm, level surface in a clean, dry, well-lit area. Move the tow vehicle clear and secure the trailer to prevent movement.
- Keep hands, feet, clothing, and all body parts away from pinch points and moving components.
- Use correct parts or equivalent. Unauthorized parts may void the warranty. Contact the factory if in doubt.
- When installing or reinstalling parts, tighten all fasteners to the specified torque values. Refer to **Bolt Torque** on page 32 and the **Lug Nut Recommended Torque Values** on page 35.

MS-0007

## Storing the Grass Drill Trailer

Store the grass drill trailer away from people and animals. Store the trailer indoors whenever possible to help prevent rust and corrosion.

**Perform the items on this checklist before storing the trailer:**

1. Clean the trailer and remove all dirt, debris, and foreign material to help prevent rust and corrosion.
2. Check the trailer for any damaged or worn parts; make repairs and replacements as required.
3. Apply paint to exposed metal surfaces to help prevent rust and corrosion.
4. Support the trailer on blocks during storage to prevent tire flat spots, deterioration, and other damage.
5. Replace any safety decals, signs, or reflector decals that are damaged, missing, or no longer legible.

# Securing the Grass Drill Trailer for Maintenance

**⚠ WARNING**

- Never work on or under the grass drill trailer unless it is securely positioned, blocked, and supported to prevent movement or falling. This includes when working on tires and wheel assemblies.
- Properly block and support the trailer before performing maintenance. Ensure the trailer and its components cannot move, shift, fall, or crush anyone.
- Lift and support the trailer only at approved support points using properly rated equipment.
- Use stable, properly rated jack stands suitable for supporting the trailer.

**Important**

Park the trailer on a firm, level surface, clear of people, equipment, and other hazards. Use extreme caution when lifting or working on the trailer.

## Grass Drill Trailer Support Points

⚠
- Perform maintenance only on a firm, level surface capable of supporting the trailer and lifting equipment.
- Ensure the grass drill trailer jack stand supports are firmly on the supporting surface.
- Never enter beneath an trailer, grass drill, axle frame, or raised component that isn't properly supported.
- **Position jack stands at the designated support points near the rear corners of the axle frame, as shown.**

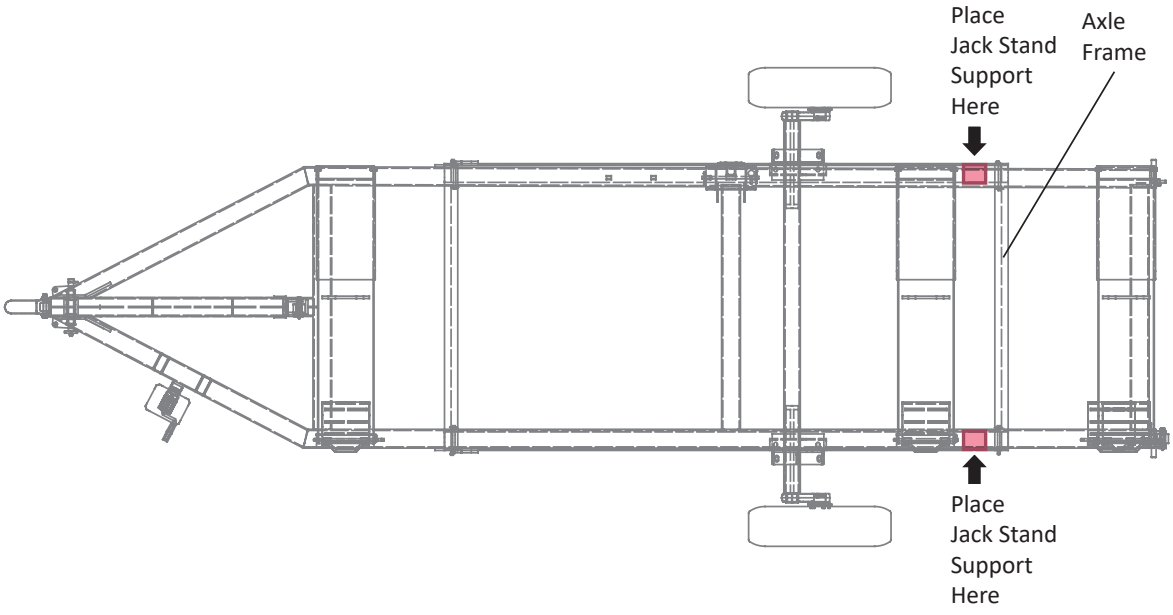

# Bolt Torque

Bolt Grade Designation

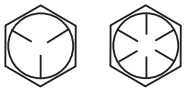

Grade 5 Grade 8

| Bolt Diameter | SAE Grade 5 | | SAE Grade 8 | |
|---|---|---|---|---|
| | ft-lb | Nm | ft-lb | Nm |
| 3/8” | 35 | 47 | 50 | 68 |
| 7/16” | 55 | 75 | 80 | 108 |
| 1/2” | 85 | 115 | 120 | 163 |
| 9/16” | 130 | 176 | 175 | 237 |
| 5/8” | 170 | 230 | 240 | 325 |
| 3/4” | 300 | 407 | 425 | 576 |
| 7/8” | 445 | 603 | 685 | 929 |
| 1” | 670 | 908 | 1030 | 1396 |
| 1-1/8” | 910 | 1234 | 1460 | 1979 |
| 1-1/4” | 1250 | 1695 | 2060 | 2793 |

# Maintenance Schedule

| Maintenance Task | Task Frequency |
|---|---|
| Check for any missing safety decals | Before each use |
| Check for and make any needed repairs or part replacements. | After each use |
| Lubricate lube points | Follow the **Lubrication Points and Schedule** |
| Grease the wheel bearings | Follow the **Lubrication Points and Schedule** |
| Check tires/wheels; inflate tires if needed. | Before each use |
| Repaint any exposed metal. | Whenever you notice scratches, chips, or rust |
| Check wheel lug nuts for proper torque. | Every 50 hours of trailer use |
| Clean | As needed |

# Lubrication Points and Schedule

Lubricate all grease fittings with clean SAE multipurpose grease suitable for the operating conditions. Do not mix incompatible grease types. Wipe each fitting clean before applying grease.

### Lubrication Schedule

| Lubrication Points | Description | Frequency |
|---|---|---|
| A | Tongue Rollers Grease Zerks | Once each season |
| B | Frame Rollers Grease Zerks | Once each season |
| C | Jack Grease Zerk | As needed |
| D | Wheel Bearings | At the interval specified by the axle or hub manufacturer |
| E | Top Track of the Extendable Tongue Beam | As needed |
| F | Axle Frame Wheel Track | As needed |

### Lubrication Points



# Replacements and Parts

## Replacement and Parts Safety

**⚠ WARNING**

*Always follow all safety instructions.*

- Ensure the work area is clean, dry, level, and well lit.
- When lubricating or working on the grass drill trailer, ensure it is resting firmly on the ground. Ensure there is no possible way the trailer or any part of it can move.
- Before servicing, inspecting, adjusting, or lubricating the grass drill trailer, park on firm, level ground in a clean, dry, well-lit area. Move the tow vehicle clear and secure the trailer to prevent movement.
- Keep hands, feet, clothing, and all body parts away from pinch points and moving components.
- Use correct parts or equivalent. Unauthorized parts may void the warranty. Contact the factory if in doubt.
- When installing or reinstalling parts, tighten all fasteners to the specified torque values. Refer to **Bolt Torque** on page 32 and the **Lug Nut Recommended Torque Values** on page 35.

MS-0007

# Replacing a Wheel

## Removing a Wheel

1. Ensure the grass drill is unloaded from the grass drill trailer and parked a safe distance away.
2. Park the grass drill trailer on a firm, level surface. Chock the wheels and ensure the trailer cannot move.
3. Apply the tow vehicle's parking brake and shut off the engine.
4. Unhitch the trailer from the tow vehicle.
5. Move the tow vehicle clear of the trailer.
6. Raise and support the trailer as described in **Securing the Grass Drill Trailer for Maintenance** on page 31.
7. Remove the wheel assembly.

## Installing a Wheel and Applying Correct Lug Nut Torque

1. Verify that the replacement wheel assembly matches the original wheel and tire specifications. Contact Strobel Manufacturing for any replacement parts needs.
2. Inspect wheel studs and lug nuts for damage. Replace any damaged or excessively worn components.
3. Clean dirt, debris, grease, rust, and corrosion from the wheel mounting surfaces, wheel studs, and lug nuts.
4. Using safe lifting practices, position the wheel assembly on the hub.
5. Align the wheel with the studs and install the lug nuts by hand.
6. Hand-tighten the lug nuts evenly to seat the wheel against the hub.
7. Tighten the lug nuts in the sequence shown below.
8. Using a calibrated torque wrench, tighten the lug nuts in the sequence shown below to the recommended torque value.
9. After 50 hours of grass drill trailer operation, retorque all wheel lug nuts to the specified value.

**8 Bolt Wheel Lug Nut Tightening Pattern and Torque Value**

*8 Lug*
Tightening Pattern

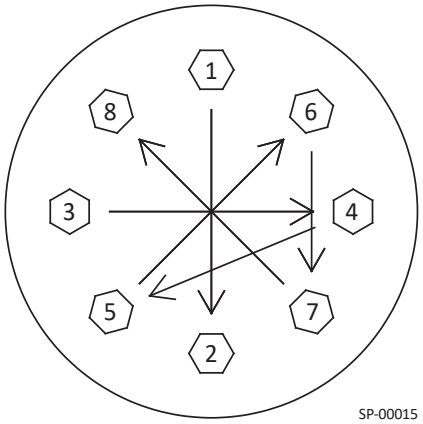

SP-00015

*Lug Nut Recommended Torque Values*

| | Lug Nut Torque Value | |
|---|---|---|
| Lug Nut Size | ft-lb | Nm |
| 1/2"-20 | 70–90 | 122 |

**Important**

**Recheck wheels for proper torque every 50 hours of operation.**

## Replacing Wheel and Tire Assemblies

**⚠ WARNING**

- Only trained personnel with proper equipment should service tires and wheels.
- Tire and wheel work is hazardous; use correct tools and follow best practices.
- Do not mount, demount, or inflate tires without proper equipment and experience.

**Important**

- Follow the wheel removal and installation instructions on page 35.
- Ensure replacement tires and wheels match the original size and type; contact Strobel Manufacturing if unsure.
- Inflate tires in a safety cage, using a long hose, using a clip-on chuck, and standing to the side.
- Replace, do not repair, cracked, corroded, bent, or otherwise damaged wheels, rims, or tires.
- Never weld or cut an inflated tire; heat can cause a tire pressure explosion.

| Part Number | Description |
|---|---|
| 23038004 | Complete Wheel/Tire Assembly 8-Bolt, 235/80R16 |


SP-00170

# Axle Assembly, Hub Assemblies, and Lug Nuts

| ID | Part Number | Qty | Description |
|---|---|---|---|
| 1 | LP127206 | 2 | Dust Cap |
| 2 | LP122081 | 2 | 1”-14 Castle Nut |
| 3 | LP179660 | 2 | 1.06” ID x 2” OD Hardened Flat Wshr |
| 4 | LP141291 | 2 | Grass Drill Idler Hub Assembly |
| 5 | LP122075 | 2 | 0.12” x 1.75” Cotter Pin |

| ID | Part Number | Qty | Description |
|---|---|---|---|
| 6 | LP132923 | 2 | Grass Drill Spindle Assembly |
| 7 | 2024020305 | 2 | 2” x 2” x 20.63” Heat Trt Inr Axle Bar |
| 8 | LP140428 | 2 | 7,000 lb Bored Torsion Arm |
| 9 | 14230004 | 16 | 1/2”-20 Lug Nut |
| 10 | Contact Factory | 1 | 6,645 lb Capacity Grass Drill Axle |

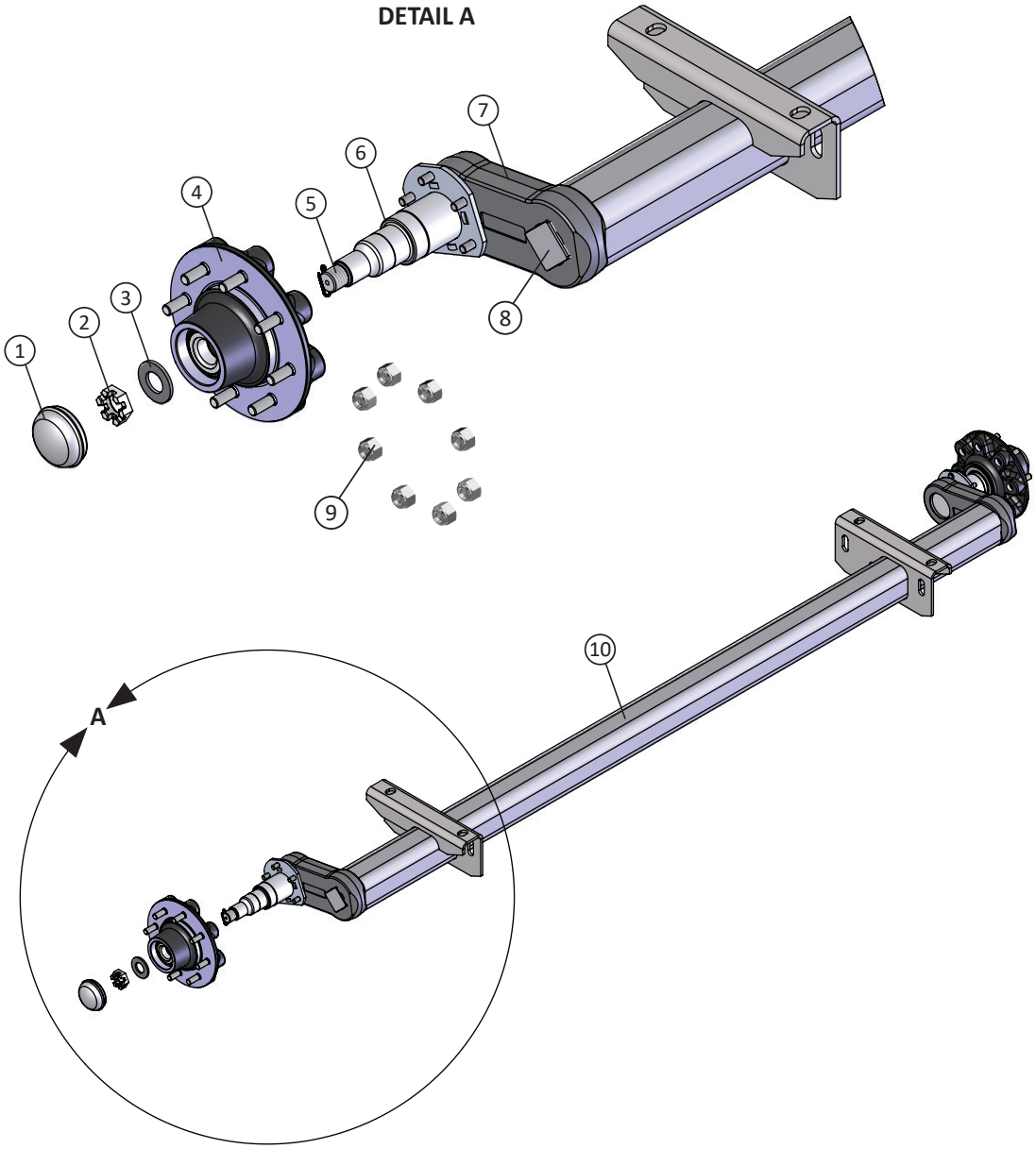

# Grass Drill Trailer Hardware, Jack, and Small Components

| ID | Part Number | Qty | Description |
|---|---|---|---|
| 1 | 23200025 | 1 | Grass Drill Tongue Support |
| 2 | Contact Factory | 5 | 1/8” Dia. x 2-9/16” OAL Bridge Cotter |
| 3 | Contact Factory | 1 | 17/32” Dia. x 2” OAW x 8-13/16” OAL L-Pin Fastener with Cotter Hole |
| 4 | Contact Factory | 4 | 1/2” Dia. x 1.8” OAW x 5” OAL L-Pin Fastener with Cotter Hole |
| 5 | 03200010 | 1 | 2-5/16” Adjustable Hitch Coupler, 14,000 lb |
| 6 | 14120010 | 2 | 5/8” Lock Nut |
| 7 | 02080061 | 2 | 5/8” x 4-1/2” Hex Bolt, Grade 5 |

| ID | Part Number | Qty | Description |
|---|---|---|---|
| 8 | Contact Factory | 1 | M4 x 75 mm (5/32” x 3”) Bridge Cotter |
| 9 | Contact Factory | 1 | 1” I.D. x 1.53” O.D. x 5/16” Depth Hitch Pin Spacer |
| 10 | Contact Factory | 1 | 1” Dia. x 6” Usable Length Hitch Pin with Handle and 5/32” Cotter Hole |
| 11 | Contact Factory | 1 | 9/16” Dia. x 4” OAL Swivel Jack Pull Pin with Ball Lock |
| 12 | 10200001 | 1 | 7,000 lb Heavy-Duty Jack |
| 13 | 19209010 | 2 | Ratchet and Tie-Down Strap w/ Clips |

* OAL = Overall Length, OAW = Overall Width




10,000 lb Work Load Limit Ratchet and Strap

# Grass Drill Ramp Assembly and Wheel Stop/Chock Components

| ID | Part Number | Qty | Description |
|---|---|---|---|
| 1 | 02080042 | 4 | 1/2” x 1-1/4” Grade 5 Hex Bolt, Plated |
| 2 | 14120003 | 4 | 1/2” Hex Lock Nut (Nylock) |
| 3 | 16180054 | 2 | Small Fold-Out Ramp |
| 4 | Contact Factory | 2 | 1/2” Dia. x 1-7/16” OAW x 13-7/8” OAL L-Pin Fastener with Cotter Hole |

| ID | Part Number | Qty | Description |
|---|---|---|---|
| 5 | Contact Factory | 2 | 1/8” Dia. x 2-9/16” OAL Bridge Cotter |
| 6 | 23230004 | 2 | Grass Drill Trailer Wheel Stop/Chock |

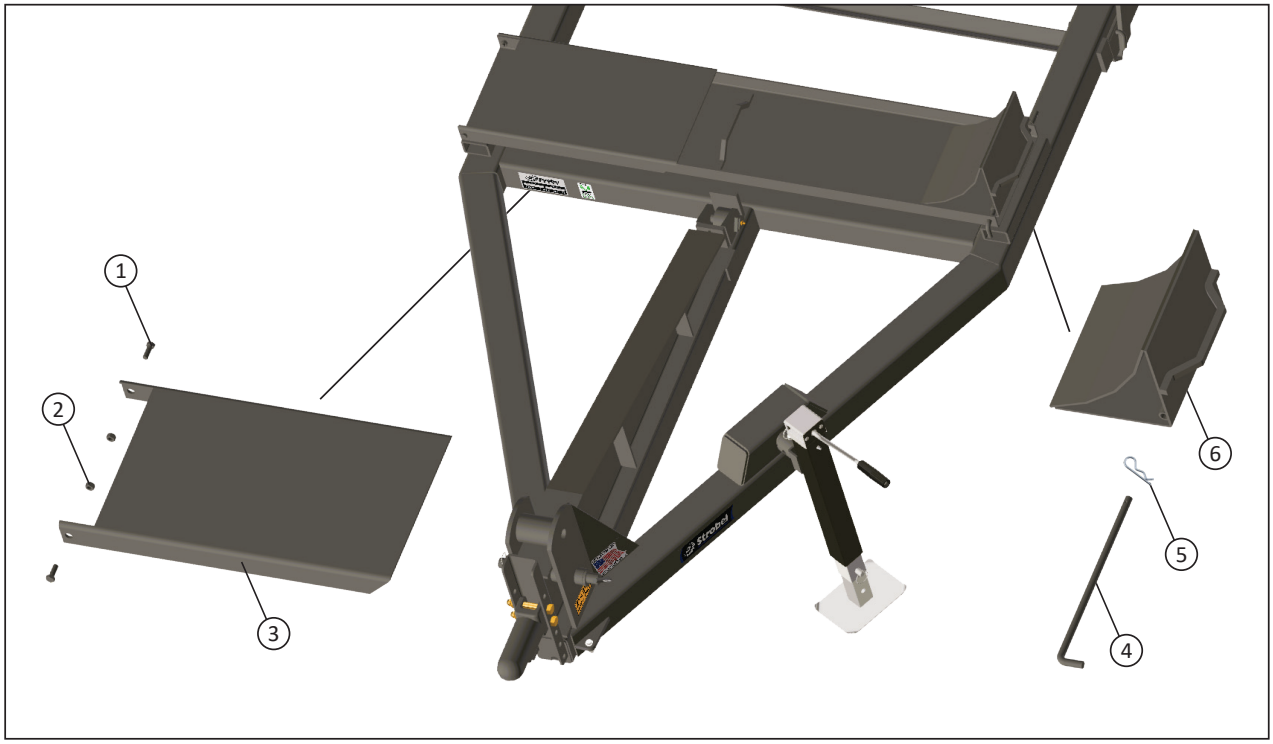

# Troubleshooting

| Trouble | Problem | Cause / Solution |
|---|---|---|
| Hitch coupler won't latch. | Debris has built up inside the hitch. | Remove the debris inside the hitch. |
| | The latch tongue in the coupler or latch spring is damaged. | Repair the latch tongue or spring if possible. |
| Jack will not crank or is bent. | Damaged jack. | Repair or replace the jack. |
| Loaded grass drill moves when towing. | Improperly secured grass drill. | Secure it correctly. See pages 20—24. |
| Tires wearing unevenly or trailer pulls to one side. | Incorrect inflation. | Inflate tires to proper pressure indicated on the tire sidewall. |
| | Axle alignment is off, or trailer frame is not straight, or connection between gusseted axle mounts and axle has shifted. | Have the axle alignment inspected and corrected by a qualified trailer service technician. |
| | | Replace damaged gusseted axle mounts. |
| | | Send to Strobel Manufacturing or a heavy-duty truck and trailer repair facility to have the damaged frame straightened. |
| | | Send the trailer to Strobel Manufacturing to have the bent axle tube replaced. |
| Trailer wiggles, makes unusual noise, or wheel hubs are hot when towed. | Low tire pressure. | Check pressure; replace a punctured tire. |
| | Wheel bearing(s) need replacement. | Stop towing. Inspect and service the wheel bearings before further use. Replace any worn or damaged bearings and races. |

# Quick Reference Index

**G**
Grass Drill Trailer Specifications *16*

**H**
Hitching and Unhitching the Grass Drill Trailer *17*

**I**
Inspecting the Grass Drill Trailer Before Transport Operation *16*
Installing a Wheel and Applying Correct Lug Nut Torque *35*

**L**
Loading the Grass Drill Onto the Grass Drill Trailer *20*
Lubrication Points and Schedule *33*
Lug Nut Recommended Torque Values *35*

**M**
Maintenance Schedule *32*
Maximum Transport Speed *19*

**O**
Operating Safety *14*

**R**
Replacing Wheel and Tire Assemblies *36*

**S**
Safety *6*

**T**
Transport Operation *19*

**U**
Unloading the Grass Drill From the Grass Drill Trailer *24*

FARM EQUIPMENT MANUFACTURERS ASSOCIATION
FEMA FarmEquip.org
MEMBER

SINCE 1946

Made in America

Since 1946 Strobel Manufacturing has been designing and building innovative, durable products that solve real-world problems. Every piece of equipment is built for rugged daily use – robust and durable. We call it Strobel Strong. Welcome to the Strobel family.

© Strobel Manufacturing, Inc. 2026 | All rights reserved.

Strobel

strobelmfg.com |
sales@strobelmfg.com

105 S. Green Street
Clarks, NE 68628
308.548.2254