SEED PLANTING SERIES

14R7 and 20R7 Grass Drills

Operation, Maintenance, and Parts Manual



DO NOT OPERATE THIS EQUIPMENT UNTIL THIS MANUAL HAS BEEN READ AND UNDERSTOOD.

Part Number: 13500011
Original Instructions

Serial Number and Product-Specific Information

- The grass drill serial number is located as shown below.
- When ordering parts, requesting service, or requesting other information, always provide the dealer with the grass drill serial number.
- Record the following information for easy reference.

Model Number		Serial Number	
Date of Purchase			
Dealer		Dealer Phone Number	
City		State	Zip

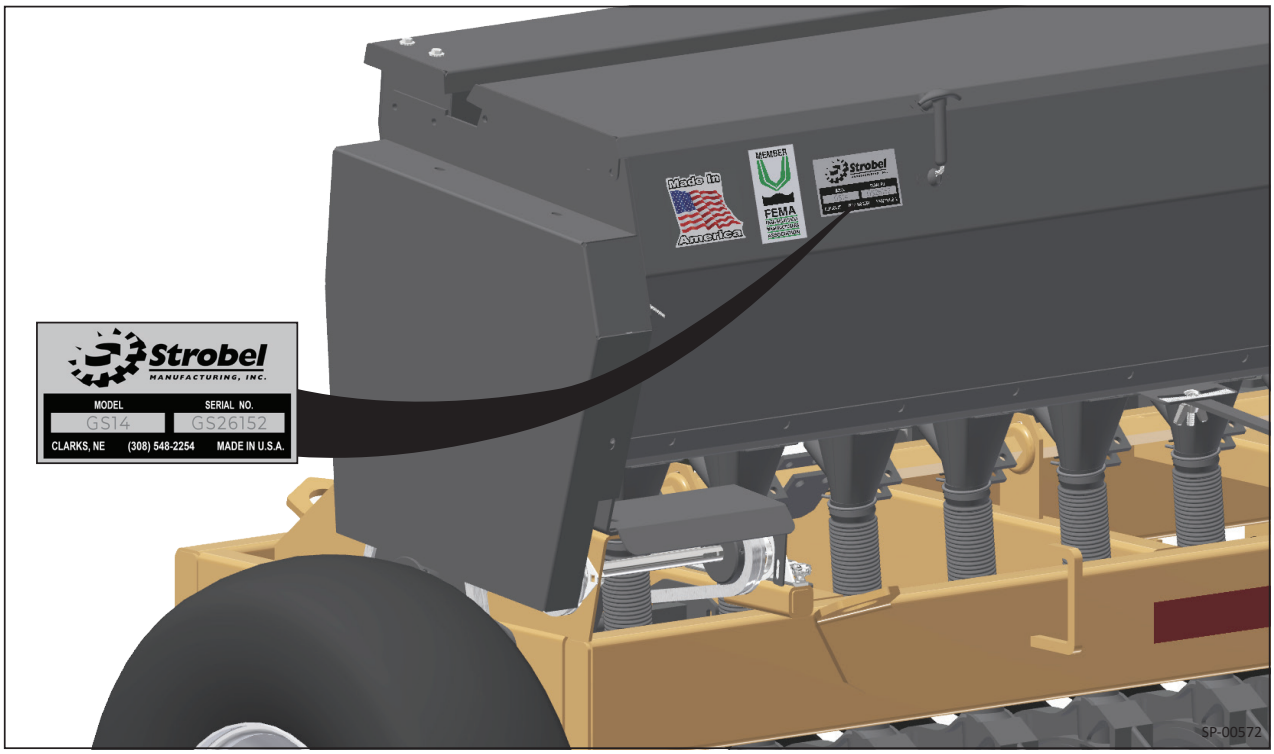

Contents

Serial Number and Product-Specific Information 3
Contents 4
Safety 6
Safety Alert Symbol and Signal Words 6
General Safety Information 6
Safety Decals 7
Safety Decal Details and Locations 7
Before Operating 9
Transport Safety 10
SMV and SIS Signs 10
Working On or Near This Grass Drill 11
Hydraulic Power and Pressurized Oil Safety 12
Wear Personal Protective Equipment 13
Prepare for Emergencies 14
Operation 15
Operating Safety 15
Grass Drill Features 15
Grass Drill Orientation 15
14-Hole Grass Drill Main Features Identification 16
20-Hole Grass Drill Main Features Identification 18
Drive Assembly Main Features Identification 20
Grass Drill Specifications 21
Preparation 22
Preparing the Tractor or Tow Vehicle 22
Preparing the Jack Assembly 23
Hitching/Unhitching the Grass Drill 23
Moving the Tractor Into Position 24
Hitching the Implement to the Tractor 24
Unhitching the Grass Drill 24
Checking the Grass drill Before Operating or Transporting 24
Verifying the Equipment is Ready Before Operation or Transport 25
Visually Inspecting Before Operation or Transport 25
Preparing the Hydraulics Before Operation 25
General Operating Instructions 26
During Transport 27
Staying Safe on Inclines 27
Some Grass Drill Common Uses 28
Select the Appropriate Seed Box to Load For Your Seed 28
Load These Seed Types Into the Small Seed Box 28
Load These Seed Types Into the Large Seed Box 29
Grass Drill Seed Rate Calibration 30
Small Seed Box Drill Settings 30
Large Seed Box Drill Settings 30
Calibrating the Grass Drill Seeding Rate for the Specific Seed Type 31

Maintenance *32*
Maintenance Safety *32*
Safely Jacking and Supporting the Grass Drill *32*
Grass Drill Approved Support Points *33*
Storing the Implement *34*
Bolt Torque *34*
Maintenance Schedule *35*
Lubrication Guide and Schedule *36*
Grass Drill Lubrication Points *36*
Replacements and Parts *38*
Replacement and Parts Safety *38*
Replacing a Wheel *39*
Removing a Wheel *39*
Installing a Wheel and Applying Correct Lug Nut Torque *39*
Grass Drill Tire and Wheel Assemblies *40*
All Models Replacement Parts *41*
Grass Drill Spindle and Hub Assembly *41*
Drive Assemblies Components *42*
Bearings, Bearing Flanges, and Bearing Plates *42*
Acre Meter Replacement Parts *42*
Clutch Assembly Components *43*
Agitator, Metering Hopper, and Cup Assemblies Components *44*
Hydraulic Hoses, Hydraulic Fittings, Hydraulic Cylinder, and Cylinder Hardware *45*
Seed Boot, Disc, and Drag Chain Assemblies Components *46*
Pins, Bolts, Washers, Hardware, Ratchet Cylinder, Tongue, Hitch, and Miscellaneous *48*
Troubleshooting *50*
Quick Reference Index *51*

Safety

Safety Alert Symbol and Signal Words



- This safety alert symbol indicates an important safety message in this manual.
- When you see this symbol, be alert to the possibility of injury or death.

Signal Words: Be aware of the signal words **DANGER**, **WARNING**, **CAUTION**, and **NOTICE**. These signal words indicate a level of safety risk.

DANGER	Indicates extremely imminent hazards where death or serious injury will result if these hazards are not avoided.
WARNING	Indicates hazards at hand where death or serious injury likely could occur if these hazards are not avoided.
CAUTION	Indicates hazards at hand where personal injury likely may occur if these hazards are not avoided.
NOTICE	Used to convey important information that is not related to personal safety, such as maintenance, cleaning guidelines, avoiding implement damage, and the like.

GS-0001

General Safety Information



All safety information in this manual is essential and is intended to assist in identifying and preventing incidents that could cause injury, death, or property damage. *Read, understand, and follow this manual and all safety instructions before operating, maintaining, or working near this equipment.*

- **Safety is your responsibility.** As the owner, operator, or supervisor you need to know and be alert to the specific requirements, precautions, and hazards that exist and to make these known to all personnel working with the equipment or in the equipment area, so they too may take any necessary safety precautions that may be required.
- **Prevent accidents by anticipating the result before the accident is caused.** As an owner, operator, or supervisor you are responsible.
- **Allow only experienced personnel to operate this equipment.** Operators need to be trained and familiar with this type of equipment.
- **Never use the equipment for purposes or applications it is not designed for.**
- **Never use any equipment that is damaged or has become unsafe.**

GS-0000

Safety Decals

- Ensure all safety decals/signs are present in each designated location, and install new decal(s) if any are missing or unreadable.
- Ensure replacement parts display the same safety decals.
- Contact Strobel Manufacturing to obtain free replacement safety decals.

SA-0005

Safety Decal Details and Locations

- Following are Safety Decal Identification Images of grass drill decals with locations drawings showing where these decals attach to each implement model, along with the decal part number.
- Safety decals draw attention to safety concerns, precautions, and possible hazards.

SA-0008

(A) Warning High Pressure Fluid Hazard, 04039113



(B) Grease Point, 04078007



(C) Seeding Rate Calibration Instructions

SEEDING RATE CALIBRATION INSTRUCTIONS

1. Jack up off the ground the side of the grass drill with the acre meter.
2. Place a tarp under the seed boots where seed exits the grass drill and open the seed box flow gate the approximate amount expected to deliver proper seed flow.
3. Weigh out the amount of seed you will put into the seed box. Choose an amount of seed notably larger than the quantity of seed specified per acre for planting.
   Remember
   Even if the seed box flow gate opening is set to the same mark used previously, the amount of seed dispensed may vary. Always fill the seed box with more seed than the prescribed application rate per acre for the grass seed being calibrated.
4. See **Grass Drill Seed Rate Calibration** in the grass drill manual. Put the weighed seed into the seed box designated for the type of seed you are calibrating. (If there's no designated seed box for your seed type, then use the designated seed box for the closest matching seed type found in the table on this page or the previous page.)
5. Scribe a chalk mark on the raised tire for counting tire revolutions.
6. Simulate one acre of planting by turning the 14-hole grass drill tire 685 revolutions, or turning the 20-hole grass drill tire 484 revolutions.
7. Gather the seed that was dispensed onto the tarp and weigh it and compare the discharged weight to the desired seeding rate.
8. Determine if the desired per acre quantity of seed was dispensed, adjust the seed box flow opening as required, and run the test again if necessary.

   Note
   Seed size, shape, moisture, treatment, and other factors can affect seeding rate. Always verify calibration for each seed type.

SP-00571 R0

(D) Guard Warning Decal, 04039109



(E) Reflector Decal, 18190101



(F) Reflector Strip



Safety Decals Locations

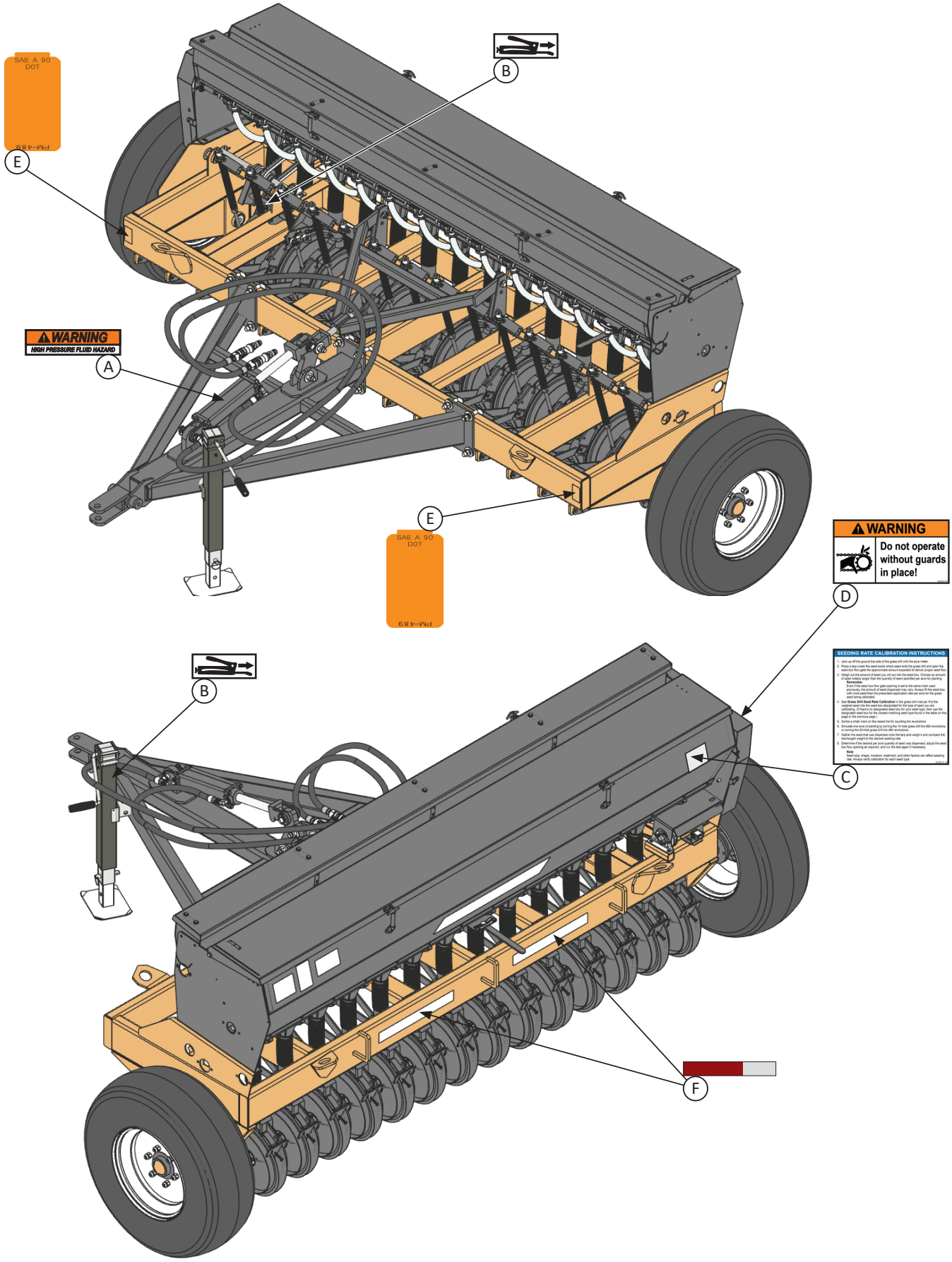

Before Operating

⚠ WARNING

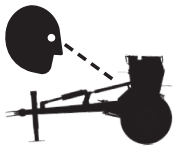

- Walk around the equipment and inspect it. Do not operate a grass drill with damaged parts, tires, or wheels. Do not operate a grass drill with missing parts or lug nuts.
- Check tire condition and make sure the tires have proper pressure. Check the tire sidewall for proper PSI.



- Never allow anyone to ride on or be on the implement.
- Never allow anyone who is untrained or underage to drive the towing tractor/vehicle or to operate the equipment. Refer to the applicable laws and safety rules within the local jurisdiction.



- Keep children, untrained persons, any others, and animals away from the equipment when it is parked, operating, or moving.



- Always make sure all persons, animals, buildings, and objects are clear of the equipment path and work area. Prevent striking, crushing, or running over persons or obstacles.



- Always wear a seat belt. The equipment could accidentally overturn, strike an obstacle, or come to an abrupt stop. Wearing seat belts help reduce the chances of serious injury or death.

- In the US, OSHA rules and regulations apply when the machine is used in a workplace or with employees.
- Regulations pertaining to grass drills may differ depending on its use. Agricultural use may be treated differently than construction or commercial hauling. Definitions vary by state.
- Ensure all safety devices are properly installed and that none are missing, damaged, or disabled.
- Ensure the tractor drawbar, hitch pins, and safety locks are all in place and ready for towing.
- Ensure the grass drill hydraulic hoses are properly connected to the tractor hydraulic couplers and that hoses are routed properly to prevent kinking, pinching, and damage during operation or transport.
- Always follow all applicable operation safety instructions. Understand that grass drill transporting, travel between work areas are also types of grass drill operation.
- Read, understand, and follow the tractor operator's manual.

Transport Safety

⚠ WARNING

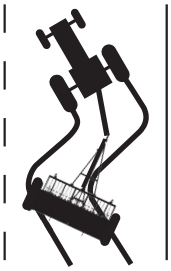

- Use safe driving techniques for snow, ice, and the current driving conditions. Avoid driving with this equipment in the dark. Refer to the tractor manual.

- Use a tractor or tow vehicle of adequate size and capacity for towing the equipment.
- Before transporting the grass drill, depressurize the implement hydraulic hoses from the tractor.
- Comply with all applicable road transport laws and regulations. Oversize restrictions, permits, and driver qualification requirements may apply. Verify requirements with local authorities before operating on public roads.
- Operators, ensure lights and all government required safety devices are present and properly located on the equipment, day and night. This includes lights, flags, safety signs, emblems, reflectors, etc. This is your responsibility. Ensure all transport lights and transport safety devices are operational and clearly visible from the front, back, and sides of the equipment.
- Choose only safe roads and driving surfaces without holes or dips; reduce speeds if the road or ground is rough, uneven, or slippery. Don't drive the grass drill where ground could give way, near edges of inclines, dangerous edges, springs, or near bodies of water.
- Check clearances carefully and use caution when moving or operating the equipment around bridges, buildings, fences, ditches, etc.
- Notice and keep all equipment away from electrical power devices.
- Check clearances and use caution when operating around electrical power devices, obstructions, ditches, etc.

TS-0007

SMV and SIS Signs



- When transporting this equipment, make sure it has a slow-moving vehicle sign (SMV) installed in a location on the rear end of the implement visible to other vehicles from 500' away.
- Install this emblem at a height of approximately 2'–6' from the ground.



- When required in your jurisdiction, install a Speed Identification Symbol (SIS) sign in a visible location on the back of the equipment.

Working On or Near This Grass Drill

⚠ WARNING



- Never work on, under, or around this grader unless it is securely blocked and properly supported. Use support devices and jacks that are in good condition and rated for the load. Ensure the grader and all components are stable and cannot fall, shift, roll, or move unexpectedly. Failure to properly support the equipment could result in crushing injuries, amputation, or death.

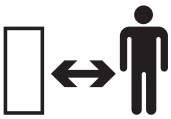

- Never allow anyone to be where they could be struck or run over by the equipment.



- During hitching/unhitching and always, check that you and all others are in a safe location that prevents anyone from getting crushed. Ensure no one can get crushed between the grass drill and a tractor, or the equipment and a structure.
- Before performing maintenance, including lubrication, shut off the tractor. Ensure the tractor and grass drill are on solid, level ground and are secured against movement before beginning work.



- Always keep hands, feet, and body clear of the grass drill cylinders, moving parts, hinges, hitch, etc., and any other potential pinch points.
- Completely prevent becoming entangled in the equipment. Don’t wear loose-fitting clothing, accessories, dangling items, baggy clothes, draw strings, etc. Secure or tie back long hair.



- Tire blow-out, rim failure, or explosive tire separation may cause injury or death. Only allow trained persons to service wheels and tires.



- Hydraulic fluid, lubricants, and grease are: poisonous, known to cause cancer, and known to cause reproductive harm. Ingesting these petroleum products can kill.

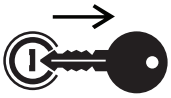

- Always shut off the tractor and relieve all hydraulic pressure before servicing or doing maintenance on the grass drill.

⚠ WARNING



- Only allow trained personnel with proper equipment to maintain or service the tire and wheel assembly.

- Use only safe work practices, methods, and procedures.
- Never allow maintenance or work to be preformed on the grass drill when hydraulic pressure isn't fully relieved. Ensure the grass drill is properly supported before working on it.
- Ensure the grass drill is free of unnecessary sharp edges, and be careful to avoid cuts from sharp edges.
- Always use correct tools and equipment.

Hydraulic Power and Pressurized Oil Safety

⚠ WARNING



- Escaping hydraulic fluid under pressure can penetrate the skin and cause serious injury, infection, or death. Use cardboard or wood to check for hydraulic system leaks. Never use your hands. Get immediate medical help if hydraulic fluids penetrate the body tissue.



- Always relieve all hydraulic system pressure before disconnecting from the tractor hydraulic system, making any adjustments, or performing maintenance on the hydraulic system.

- Always purge the air from the hydraulic system before operating.
- Never raise the tractor hydraulic system pressure above 3,000 psi. Implement hoses could burst.
- Position hoses and fittings carefully and to prevent failure due to kinking, pinching, crushing, rubbing, and weather exposure over time. Prevent hoses from being struck.
- Check hydraulic hoses and fittings periodically to prevent these from failing. Make sure all fittings, clamps, and hoses are installed properly and in good condition.
- Always repair any oil leaks. Repair any hoses that are kinked, crushed, weather cracked, or worn.
- If an accident occurs, seek medical attention immediately.

Wear Personal Protective Equipment

⚠ CAUTION



- Always wear proper personal protective clothing and equipment appropriate for each task.
- Wear eye protection near flying particles, when near a hydraulic system/pressurized fluids, and when around potential eye hazards.



- Wear steel-toed shoes during operation or when working on this equipment.



- Wear hearing protection whenever noise levels may cause hearing damage.
- Avoid wearing anything that could impair hearing such as earbuds or headphones.



- Wear protective work gloves.



- Wear high-visibility clothing when assisting operation or whenever you are in the work area of the tow vehicle and/or grass drill.

PP-0002

Prepare for Emergencies

⚠ CAUTION



- Keep a properly stocked first aid kit readily available.



- Keep a properly charged fire extinguisher readily available.



- Keep an emergency contact list for medical, fire, and rescue services nearby and on your phone.

GS-0003

Operation

Operating Safety

⚠ WARNING

Read, understand, and follow all safety instructions in this manual, on the safety decals, and in the tractor manual before operating this equipment. Always follow all safety instructions.

- Identify, anticipate, stay alert to, and assess the safety risks of each potential hazard.
- Read and follow the **Before Operating Safety** section on page 9 of this manual before starting operation, and refer to this manual's **Safety** section starting on page 6.
- Check that tractor brakes work properly before transporting or operating on inclines.
- Prevent crushing injuries. During hitching, unhitching, and all other operations, ensure no one is between the tractor and grass drill or between the equipment and any structure.
- Keep people, animals, buildings, and objects clear of the grass drill path and work area. Prevent striking, crushing, or running over persons or obstacles.
- Operate the grass drill only from the tractor operator's seat.
- Always maintain control of the grass drill and travel at a safe speed that allows you to do so.
- Operate safely on snow, on ice, and for current conditions; avoid working in the dark. See the tractor manual.
- Every time before exiting the tractor operator's station, put the transmission in park, relieve all hydraulic pressure, set the parking brake, turn off the engine, remove the key, and wait for all movement to stop.

OP-0007

Grass Drill Features

Grass Drill Orientation

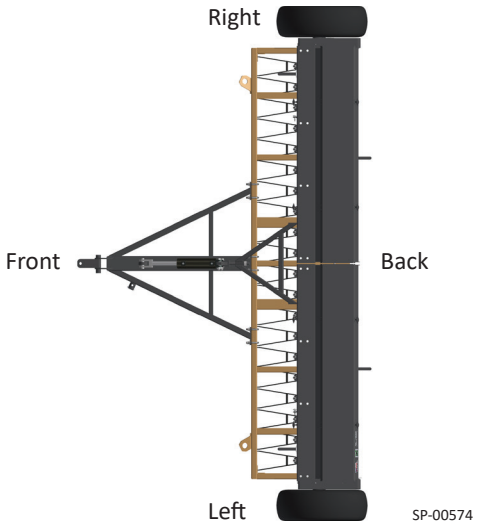

SP-00574

14-Hole Grass Drill Main Features Identification

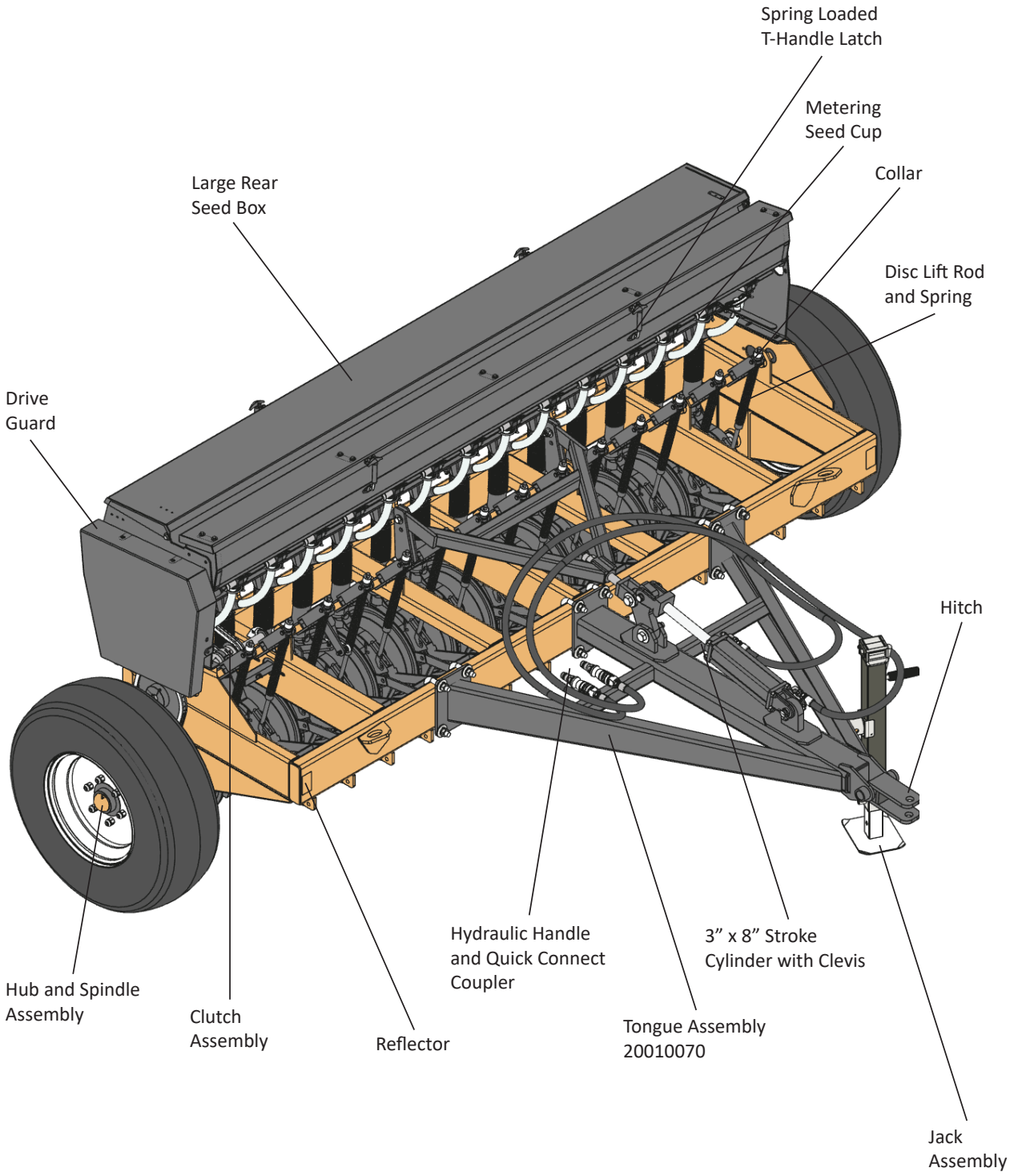

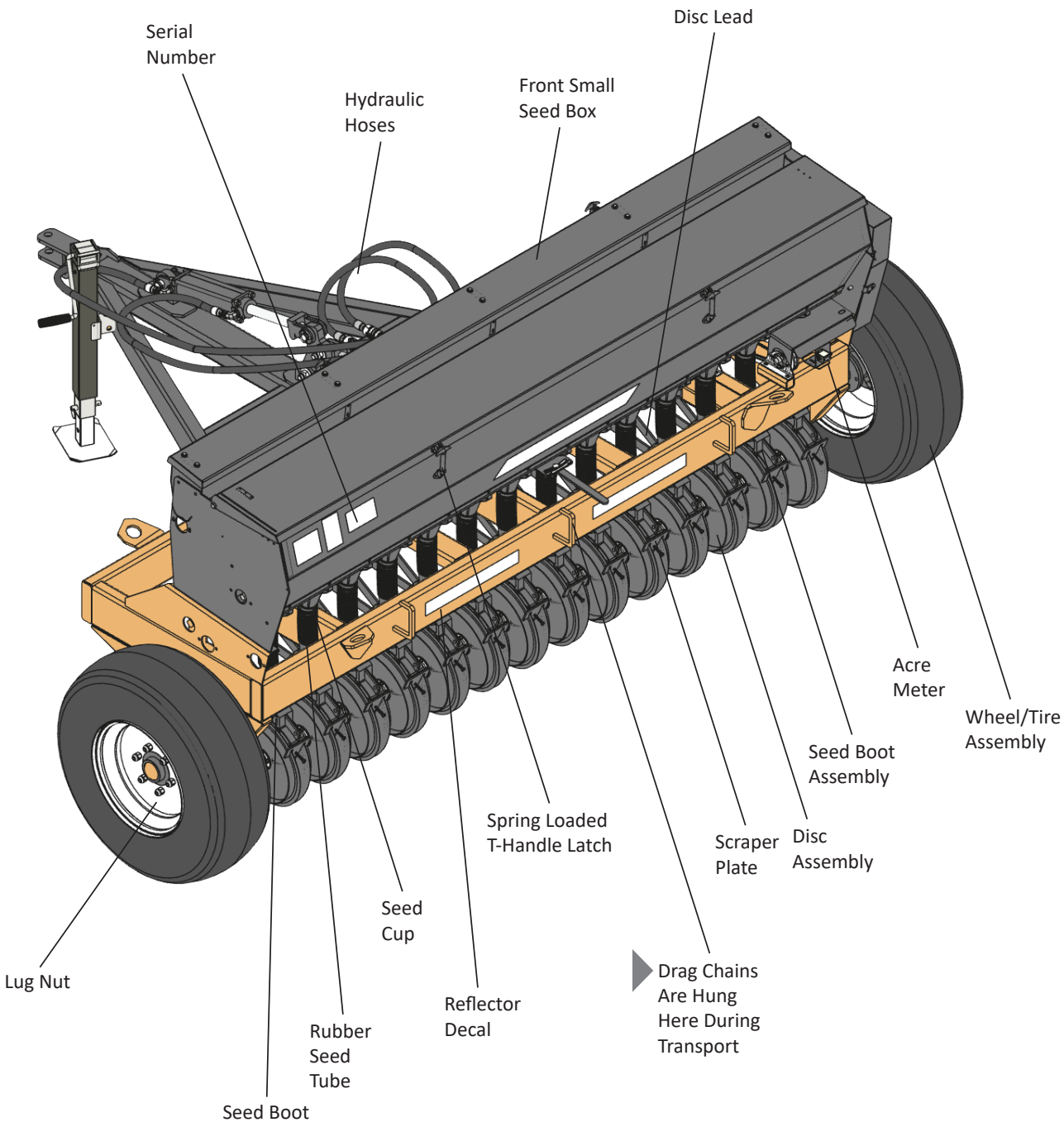
Serial Number
Hydraulic Hoses
Front Small Seed Box
Disc Lead
Acre Meter
Wheel/Tire Assembly
Seed Boot Assembly
Disc Assembly
Scraper Plate
Spring Loaded T-Handle Latch
Seed Cup
Lug Nut
Rubber Seed Tube
Seed Boot
Reflector Decal
Drag Chains Are Hung Here During Transport

20-Hole Grass Drill Main Features Identification

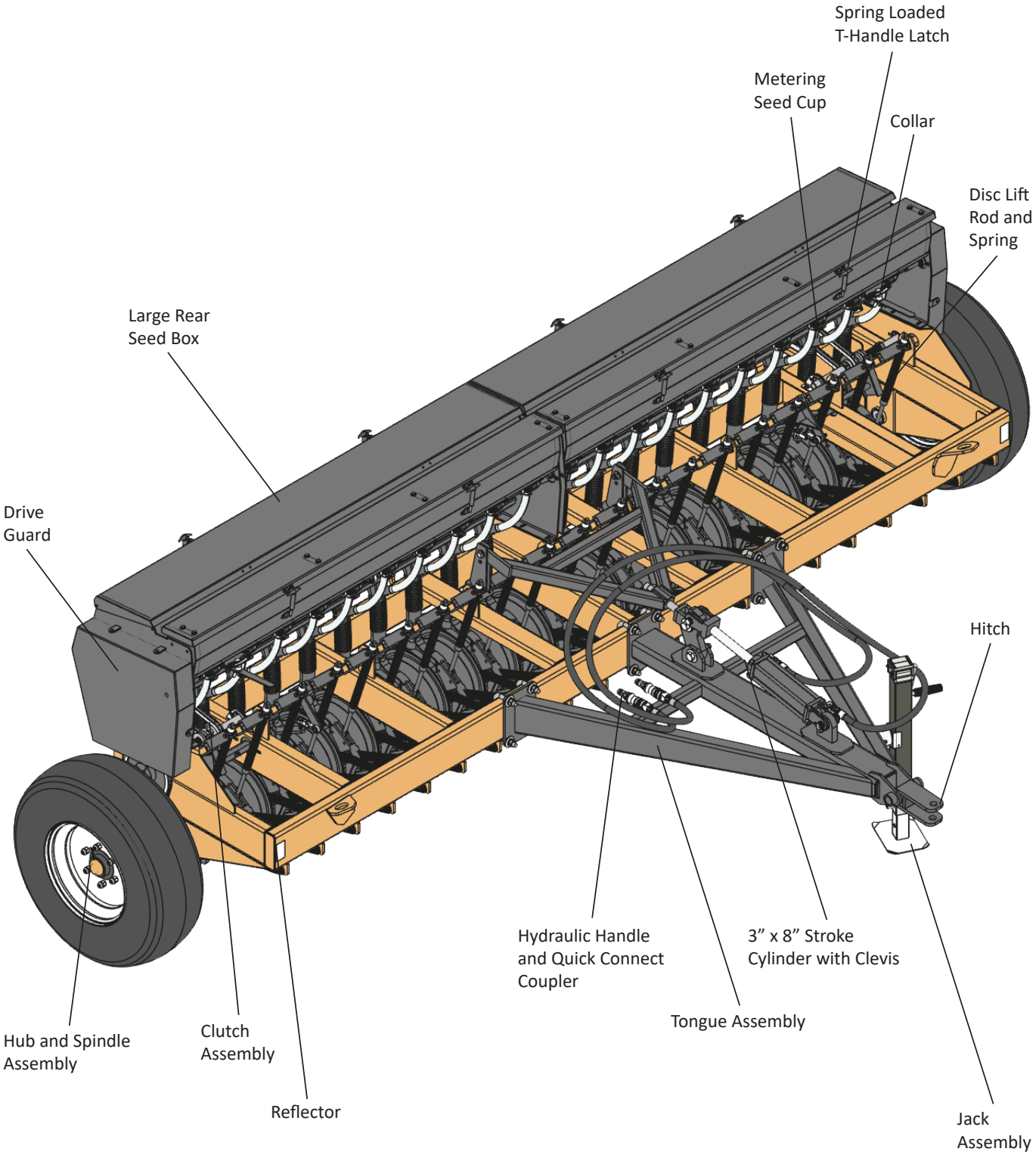

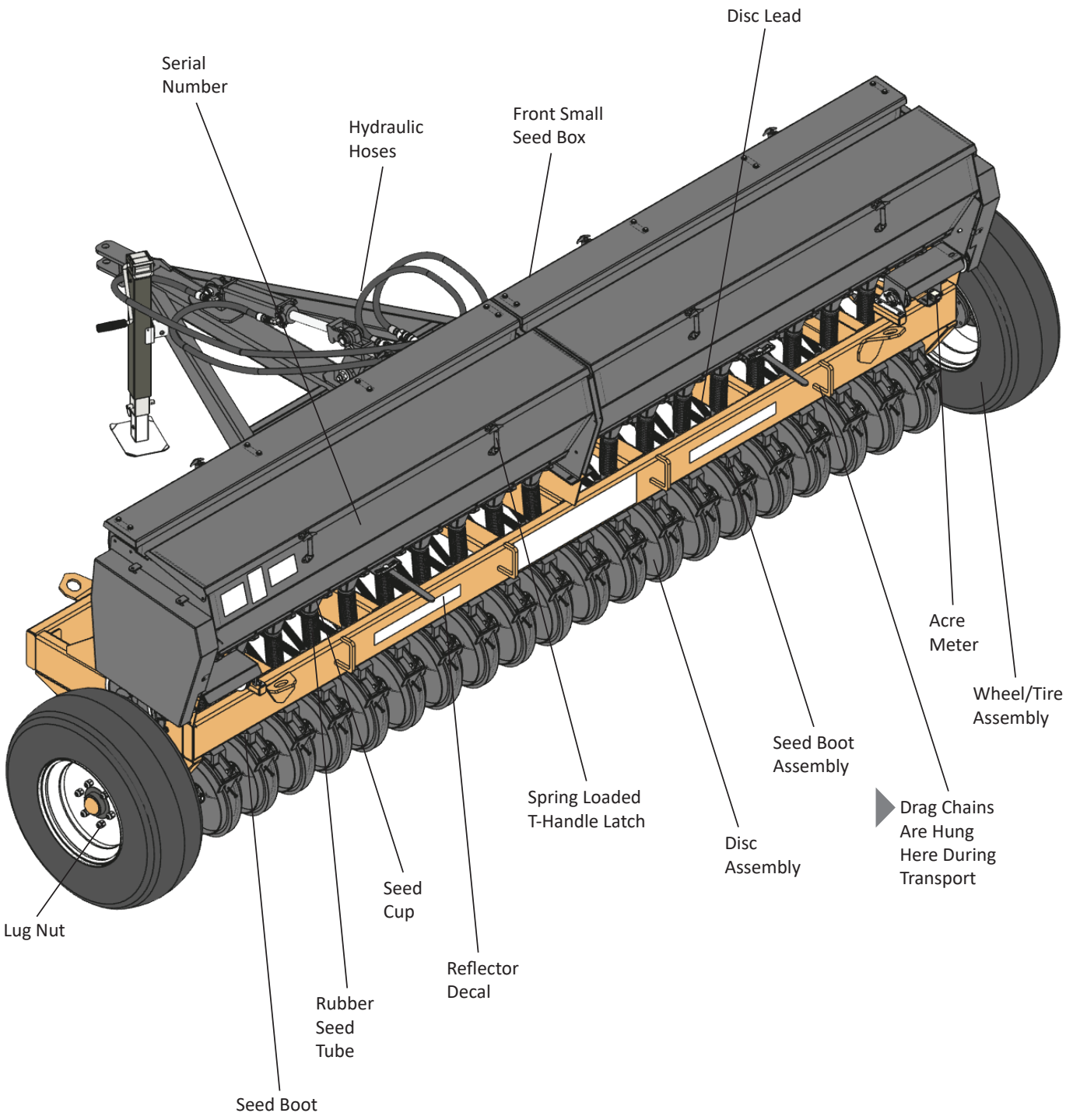
Disc Lead
Serial Number
Hydraulic Hoses
Front Small Seed Box
Acre Meter
Wheel/Tire Assembly
Seed Boot Assembly
Drag Chains Are Hung Here During Transport
Spring Loaded T-Handle Latch
Disc Assembly
Seed Cup
Lug Nut
Reflector Decal
Rubber Seed Tube
Seed Boot

Drive Assembly Main Features Identification

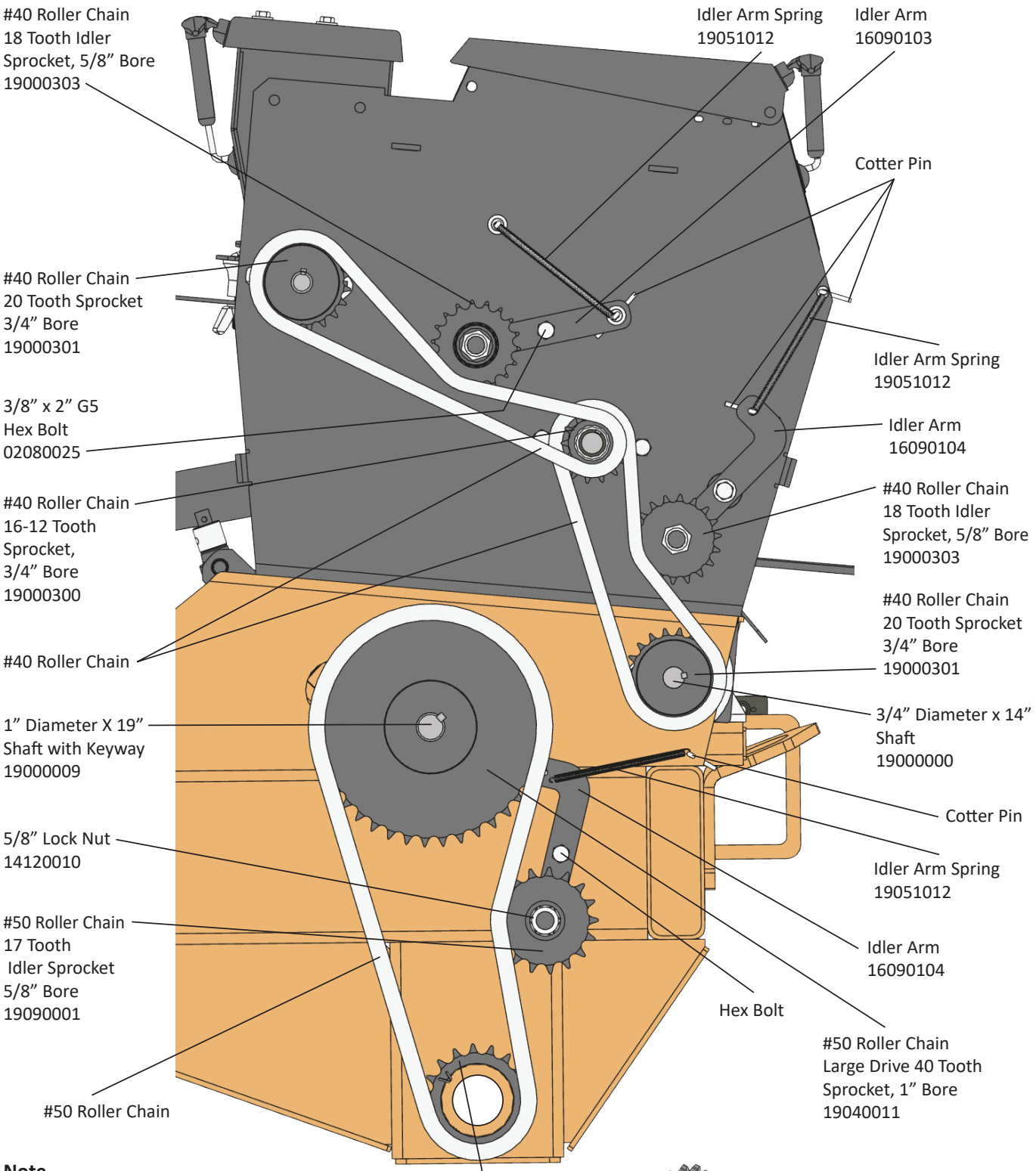

Note

A left-hand-drive assembly is shown. Right-hand-drive assembly components are identical but are installed in a mirrored configuration.

Grass Drill Specifications

Specification	14-Hole Grass Drill	20-Hole Grass Drill
Seed Boot Spacing and Planting Row Spacing	7” (178 mm)	
Number of Seeding Rows / Cutting Elements	14	20
Working Width / Seeding Width	91” (2,311 mm)	133” (3,378 mm)
Operating Weight (Approximate)	2,900 lb	4,000 lb
Hitch Type and Category	Clevis Hitch or 3-Point Hitch, Category 2	
3-Point Quick Hitch Option Available	Yes	
Minimum Tractor HP for All Typical Use	60–100 HP	
Working or Sowing Depth	1” (25 mm)	
Recommended Planting Speed	**5–6 MPH**	
Disc Diameter	13-5/8” (346 mm)	
Large Seed Box(es) Capacity (Approximate)	8.4 bu	11.8 bu (2 box volume)
Small Seed Box(es) Capacity (Approximate)	1.6 bu	2.2 bu (2 box volume)
Total Seed Boxes Capacity (Approximate)	10 bu	14 bu
Wheel and Tire Specifications	15” x 8” Wheel, 6-Bolt, 11L-15 Tire	
Discs Angle	10°	

Strobel Manufacturing Grass Drill Advantages

- **Agitator Type Seed Delivery**
- **Advanced Seed Placement System:** Provides precise and dependable seed delivery.
- **Patented Positive Flow Paddle Agitator:** Easy seed distribution and smooth operation.
- **Dog Style Clutch:** Places the seeder in and out of gear.
- **3-Point Hitch Option:** Provides greater maneuverability in smaller areas.
- **Adjustable Handle for Flow Control:** Allows simple adjustment of the large seed box for precise seeding rate.
- **Rectangular Tube Framework:** Heavy duty 6” x 2” tubular steel frame for durability.
- **Roller Chain Drive:** Drives both large and small seed box seed distribution.
- **Cast-Steel Seed Boots Included as Standard**

Strobel Manufacturing Grass Drill Options

- **3-Point Hitch Option:** Provides greater maneuverability in smaller areas.
- **Purpose-Built Trailer (Optional):** Designed for Safe and Easy Loading and Unloading by One Person.
- **Acre Meter**
- **Optional No Till Seed Boot**
- **Optional Minimum Till Seed Boot**
- **Packer Wheels**
- **Multiple Drag Chain Styles Are Available**

Preparation

Preparing the Tractor or Tow Vehicle

- Choose a tractor with sufficient size, weight, horsepower, brakes, and control to safely pull the loaded grass drill even in wet or extreme conditions, and refer to the tractor manual or tractor dealer for limits.
- Tractor hydraulics must supply a minimum of 10 gal/min (38 L/min) at 1,500 psi (10,350 kPa). Ensure the tractor reservoir has enough fluid.
- Always follow all tractor instructions for operation, tires, wheel settings, weights, equipment connection, and hydraulics.
- Ensure the tractor or tow vehicle drawbar is rated for the application and securely connected to the grass drill hitch.
- Ensure the tractor three-point linkage is secured to prevent swinging and damage to tires or hydraulic hoses.
- Ensure the hitch lock is in place.
- Check that all brakes are working correctly.
- Ensure the tractor is properly ballasted for safe, controlled grass drill operation; refer to the tractor manual.
- Ensure all lights, reflectors, and safety signs are installed and functioning properly.
- Ensure the jack is in the UP position.

Preparing the Jack Assembly

Jack in the Down Position

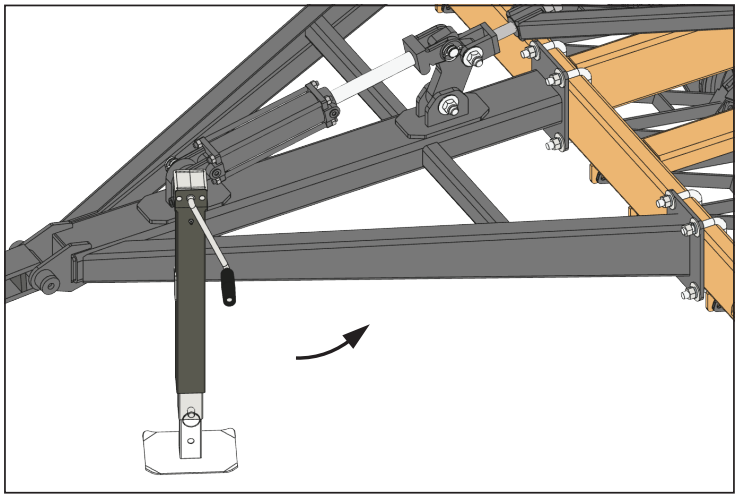

Jack in the Up or Operating Position

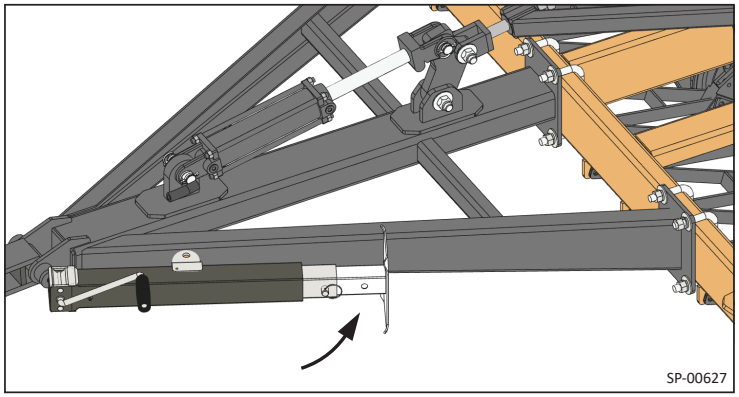

Hitching/Unhitching the Grass Drill

⚠ WARNING

- Ensure there is adequate lighting and that you can see clearly to make all connections and preparations.
- Relieve all hydraulic pressure.
- During preparation for hitching/unhitching and connecting/disconnecting hydraulics ensure the assistant guiding the tractor to the grass drill hitch is a safe distance from the tractor and grass drill whenever the tractor and grass drill are not made absolutely immovable.
- During preparation for hitching/unhitching and connecting/disconnecting hydraulics keep the assistant guiding the tractor to the grass drill hitch a safe distance from the tractor and grass drill whenever both are not secured to prevent movement.
- **Every time before you exit the tractor, put it in park, apply the parking brake, shut it off, remove the key, and ensure the tractor can't move. Then exit the tractor.**

Moving the Tractor Into Position

1. Position the tractor directly in front of the grass drill. Using hand signals, the assistant should direct the operator to slowly reverse the tractor to meet with the hitch.
2. Back the tractor at slowest idle toward the grass drill, keeping it aligned with the hitch.
3. When the tractor is in position for adjusting the grass drill jack, put the tractor in park, apply the parking brake, shut off the tractor, remove the key, and exit the tractor.
4. Raise or lower the grass drill jack assembly to align the grass drill hitch clevis with the tractor drawbar.
5. Slowly back the tractor until the drawbar is fully positioned between the grass drill hitch clevis plates.
6. When the tractor is in position for hitching to the grass drill, put the tractor in park, apply the parking brake, shut off the tractor, remove the key, and exit the tractor.

Hitching the Implement to the Tractor

Important
Always connect the implement to the tractor or tow vehicle hydraulics in a level, brightly lit area with no bystanders or other equipment operating.

1. Insert an approved hitch pin through the tractor drawbar and grass drill hitch clevis.
2. Secure the hitch pin.
3. Connect hydraulic couplers to the tractor or tow vehicle, ensuring hoses will not kink or pinch during turns.

Unhitching the Grass Drill

1. Park the grass drill on firm, level ground in a safe area, and relieve all hydraulic pressure.
2. Each time before you exit the tractor put the tractor in park, apply the parking brake, and turn off the tractor.
3. Ensure the grass drill and tractor will remain immovable.
4. Lower the grass drill jack until the weight of the grass drill rests on the jack.
5. Unhitch the grass drill from the tractor and move the tractor safely away from the grass drill.

Checking the Grass drill Before Operating or Transporting

⚠ WARNING

- Perform the checks in this manual section before operating or transporting.
- Before inspecting or connecting the tractor and grass drill, set the tractor parking brake, shut off the tractor, remove the key, and ensure the tractor and grass drill are absolutely immovable. Then check the grass drill.
- Ensure the tractor drawbar, hitch, hitch pin, and any safety locks are all securely in place and ready for towing.
- Ensure the grass drill hydraulic hoses are properly connected to the tractor hydraulic couplers and that hoses are routed properly and can’t be kinked or damaged during towing.

Verifying the Equipment is Ready Before Operation or Transport

⚠ CAUTION

Ensure lug nuts are properly torqued to prevent loss of control, injury, and/or equipment damage.

- Check for any damaged, worn, loose, or missing hardware.
- Ensure the grass drill is properly lubricated as indicated in **Lubrication Guide and Schedule** on page 36.
- Check for proper tire pressure and verify the tractor brake pedals are locked together.
- Check the tractor hydraulic oil level and add oil if necessary. Refer to the tractor operator's manual.

Visually Inspecting Before Operation or Transport

Before each use, visually inspect the tractor, grass drill, and surrounding area before operation or transport.

- Ensure all pins are present, secure, and properly retained. Replace any worn, damaged, or missing pins or parts.
- Verify the hydraulic cylinder, hoses, fittings, and other components are positioned correctly and are leak-free.
- Verify the SMV sign, reflectors, and lights are functional. Remove any debris from the grass drill.
- Confirm all shields, guards, covers, attachments, and connections are secure and functional.
- Ensure the jack is in the UP position and all equipment is fully ready for operation.
- Ensure all persons are clear of the equipment before starting the tractor.

Preparing the Hydraulics Before Operation (Hydraulic Models Only)

⚠ WARNING

If a hydraulic failure or leak occurs, stop the tractor, shut off the engine, and immediately relieve hydraulic pressure.

Note
Completely relieve pressure from the hydraulic system and cylinder before servicing. When pressure is relieved, the grass drill discs will lower and rest on the ground.

1. Inspect all hydraulic hoses and fittings for leaks, damage, wear, or twisting. Ensure any hose clamps and retaining straps are secure. Replace any damaged or worn components.
2. Check the tractor hydraulic oil level and add oil if needed.
3. Connect the hydraulic hoses to the tractor hydraulic remotes.

Recommendation

Connect the cylinder hydraulic quick couplers so that when:

- when **pushed foward** the grass drill cylinder retracts.
- when **pulled backward** the grass drill cylinder extends**.**

(continued on the next page)

4. Before leaving the hitching area, operate the hydraulic control lever and verify the cylinder fully extends and retracts.
5. While testing the hydraulic system, observe the grass drill for proper operation and check for hydraulic leaks or component failures.

General Operating Instructions

⚠ WARNING

- Read and understand this entire manual, the tractor manual, and all safety instructions before operating!
- Always protect your own safety and the safety of others, and other drivers near you.
- Keep children, bystanders, and animals away from the grass drill at all times. Never allow riders on the grass drill.
- Do not operate on slopes greater than 15°. Use caution on slopes and avoid sudden turns.
- Be aware the grass drill may be wider than the tractor. Allow adequate clearance from obstacles, structures, vehicles, and other hazards.
- efore towing on public roads or where other vehicles are present, remove any dirt and debris.
- Stay alert and plan ahead. Unexpected hazards and changing field conditions can occur.

Important

- Only trained operators who meet the minimum legal age requirements in their jurisdiction may operate or `transport the grass drill.
- Always operate the implement at a safe speed.
- Frequently monitor the grass drill during operation as necessary using the rear window and mirrors.

Note

The seed box drill settings supplied by Strobel Manufacturing were prepared for use when planting cover crops, forage crops, wildlife food plots, pastures, and conservation or erosion-control plantings.

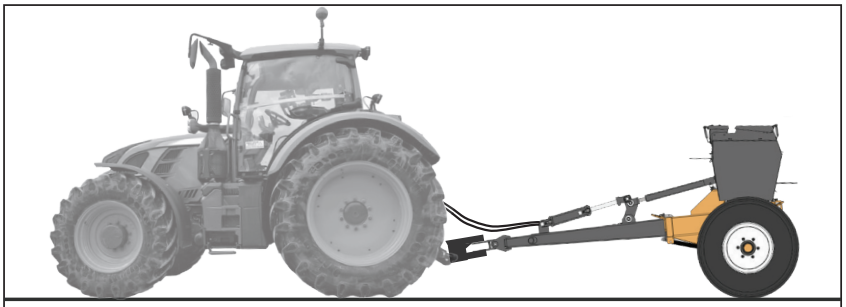

SP-00573

During Transport

⚠ WARNING

- Follow the **Operation Safety** section on page 15 of this manual.
- Do not exceed 25 mph (40 kph) on roads or 10 mph (16 kph) off-road; shift into a lower gear on steep slopes.
- Use tractor hazard flashers and all required lighting when permitted or required by local regulations.
- Check mirrors often, watch rear traffic, and use turn signals
- Slow down, apply caution, allow extra turning/stopping distance, and ensure you can stop safely, and maintain full control of the tractor and grass drill at all times.

Staying Safe on Inclines

⚠ WARNING

Failure to operate safely on slopes and grades can result in loss of control, rollover, collision, serious injury, or death.



- Stay clear of slopes with terrain, turns, and conditions that are hazardous.
- Stay clear of drop-offs, ditches, embankments, soft ground, and other hazardous terrain that could cause rollover or loss of control.
- Operate only on slopes (no greater than a 15°) that the tractor can safely traverse. Do not exceed the tractor manufacturer's operating limits.
- Avoid operating across slopes whenever possible and apply extreme caution. When conditions permit, travel straight up or down slopes.
- Reduce speed when ascending or descending slopes, lock tractor brakes together, and maintain control of the tractor and grass drill at all times.
- Avoid sudden steering, braking, acceleration, or directional changes.
- Keep all persons away from the tractor and grass drill during operation.

OP-0008

Before Operating on Slopes

- Do not operate during unsafe weather or ground conditions, including ice, snow, rain, mud, high winds, loose soil, or poor visibility.
- Verify proper brake, steering, and tire function.
- Consider tractor size, power, traction, ballast, load, and ground conditions before operating on slopes.

Safe Operating Practices on Slopes

- Select a low gear before ascending or descending slopes.
- Never coast downhill in neutral.
- Watch for uneven terrain, excessive bouncing, and sudden impacts that could affect stability.
- Avoid turning on slopes whenever possible.

Some Grass Drill Common Uses

Important

- This applications list is not exhaustive or universally suitable.
- Suitability depends on soil, terrain, conditions, and other factors. Not all applications are appropriate in all cases or conditions. Apply operator good judgement.
- Follow all local codes and regulations for tractor implement use.

Common Applications for This Native Grass Drill

- **Roadside restoration and revegetation** following road construction, road widening, utility installation, earthmoving, and erosion control projects on gently sloped roadsides and rights-of-way.
- **New pasture and turf establishment.** A grass drill provides high germination rates by accurately metering seed, placing it at the proper depth, and firming the soil in a single pass.
- **Precision seeding applications** where accurate seed metering and consistent seed placement are essential for grasses, native grasses, or grass mixtures.
- **Prairie establishment and restoration** on farms, ranches, conservation areas, and rural properties.
- **Pasture renovation and overseeding.** Grass drills minimize or eliminate tillage while placing seed precisely for improved establishment.
- **Meadow, field, and golf course renovation** replanting, improving, or maintaining established grass.
- **Grassland restoration** following wildfires, prescribed burns, or other land disturbances, including prairie restoration projects.
- **Government and conservation projects** involving the establishment and maintenance of grasslands, wildlife habitat, and conservation areas.
- **Converting former cropland** back to permanent grassland or native prairie.
- **Pollinator habitat and wildflower plantings** using native grass and wildflower seed mixtures.
- **Single-pass seeding operations** where seed placement, covering, and soil firming are desired in one pass.
- **Seeding irregular or difficult-to-access areas** requiring grass drill maneuverability, including land, surrounding bodies of water, wooded edges, rocky outcrops, cliffs, shrub thickets, talus slopes, etc.
- **Rough-terrain seeding applications** where a durable, heavy-duty grass drill is required for demanding conditions.

Select the Appropriate Seed Box to Load For Your Seed

Load These Seed Types Into the Small Seed Box

Legumes

- Horizon 444 Alfalfa
- Cody Alfalfa
- Oklahoma Common Alfalfa
- Ranger Alfalfa
- Birdsfoot Trefoil
- Ladina Clover
- Sweet Clover
- Certified Penngift Crownvetch
- Buffalo Alfalfa
- Nebraska Common Alfalfa
- Texas Common Alfalfa
- Vernal Alfalfa
- Alsike Clover
- Red Clover
- Dwarf Essex Rape
- Madison Vetch

Wildflowers

- Leadplant
- Pitcher Sage
- Maximillian Sunflower

Load These Seed Types Into the Large Seed Box

Native Grasses, Certified Seed

- Kaw Big Bluestem
- Blaze Little Bluestem
- Goldstrike Sand Bluestem
- Trailway Sideoats Grama
- Nebraska 54 Indiangrass
- Blackwell Switchgrass
- Kleingrass, Sel 75, Certified
- Pawnee Big Bluestem
- Camper Little Bluestem
- Butte Sideoats Grama
- Holt Indiangrass
- Oto Indiangrass
- Nebraska 28 Switchgrass

Native Grasses, Uncertified Seed

- Alkali Sacaton
- K. R. Yellow Bluestem
- Little Bluestem Pasture
- Black Grama, Native
- Blue Grama, Lovington
- Buffalo Grass
- Green Needle Grass
- Garrison Creeping Foxtail
- Cheyenne Indiangrass
- Indian Ricegrass
- Kleingrass, Sel 75
- Ermelo Lovegrass
- Sand Lovegrass
- Needle and Thread
- Sand Bluestem, Elida
- Sand Bluestem, Woodward
- Prairie Sand Reed
- Pierre Sideoats Grama
- Spike Muhley
- Caddo Switchgrass
- Barton Western Wheatgrass
- Big Bluestem, Native
- Little Bluestem, Native
- Old World Bluestem
- Blue Grama
- Blue Grama Panicum
- Four Wing Salt Bush
- Green Sprangletop
- Tam, Harding Grass
- Tejas Indiangrass
- Johnson Grass
- Kleingrass, Sel 75, Uncertified
- Lehman Lovegrass
- Weeping Lovegrass
- Rescue Grass
- Sand Bluestem, Garden Co.
- Sand Drop Seed
- El Reno Sideoats Grama
- Vaughn Sideoats Grama
- Blackwell Switchgrass
- Blue Bunch Wheatgrass
- Western Wheatgrass

Common Grasses

- Unhulled Bermuda
- Certified Park Kentucky Bluegrass
- Bromegrass
- Idaho Fescue
- Creeping Red Fescue
- Sterling Orchardgrass
- Annual Ryegrass
- Timothy
- Kentucky Bluegrass
- Certified Bromegrass
- Fawn Fescue
- Kentucky 31 Tall Fescue
- Potomac Orchardgrass
- Reed Canary
- Perennial Ryegrass

Wheatgrasses

- Fairway Crested Wheatgrass
- Standard Crested Wheatgrass
- Amur Intermediate Wheatgrass
- Slate Intermediate Wheatgrass
- Pubescent Wheatgrass
- Slender Wheatgrass
- Jose Tall Wheatgrass
- Thickspike Wheatgrass
- Nordan Crested Wheatgrass
- Intermediate Wheatgrass
- Oahe Intermediate Wheatgrass
- Platte Wheatgrass
- Luna Pubescent Wheatgrass
- Tall Wheatgrass
- Sodar Streambank Wheatgrass

Grass Drill Seed Rate Calibration

Important
The recommended grass drill planting speed is 5–6 MPH.

Small Seed Box Drill Settings

1. Put a predetermined, recorded amount of seed in the seed box greater than is needed to drill one acre.
2. Using the acre meter drill one acre and then check the amount of seed left in the box, and adjust as needed.

Approximate Small Seed Box Calibrations for a Few Common Grass Varieties, Seed lb/Acre

Pure Grass Type	Approximate Seed lb/Acre	Open Gate to This Approximate Scale Mark
Alfalfa	15–20 lb	9.5
Red Clover	8–10 lb	5
Sweet Clover	8–10 lb	5.5
Switch Grass	5–8 lb	2.5
Sand Lovegrass	2–4 lb	1
Reed Canary	8–10 lb	5.5

* Grass drill calibrations are approximates only and provided only as a starting point. Calibrate the grass drill to verify actual seeding rates.

Large Seed Box Drill Settings

1. Put a predetermined, recorded amount of seed in the seed box greater than is needed to drill one acre.
2. Using the acre meter drill one acre and then check the amount of seed left in the box, and adjust as needed.

Approximate Large Seed Box Calibrations for A Few Common Grass Varieties, Seed lb/Acre

Grass Type	Approximate Seeds lb/Acre	Open Gate to This Approximate Scale Mark
Native Grasses	5–12 lb	4 marks
Orchard	8–12 lb	0.5 marks
50/50 Orchard and Brome Mix	10–15 lb	1.5 marks
Cereal Rye	70–120 lb	1.5 marks
Wheat	60–120 lb	1.5 marks
Oats	60–100 lb	1.5 marks

* Grass drill calibrations are approximates only and provided only as a starting point. Calibrate the grass drill to verify actual seeding rates.

Calibrating the Grass Drill Seeding Rate for the Specific Seed Type

NOTICE

- Ensure the grass drill is securely supported before any work is performed under the grass drill.
- Keep all bystanders clear of the work area during calibration.
- Seed size, shape, moisture, treatment and other factors can affect the seeding rate. Always verify calibration for each step.
- The recommended grass drill planting speed is 5–6 MPH.

Use this procedure to determine the seeding rate for a specific seed type and to verify proper seed box settings.

Follow these steps:

1. Jack up off the ground the side of the grass drill with the acre meter until the tire is off the ground, and securely support the grass drill so the grass drill can't move.
2. Place a tarp beneath the seed boots to collect discharged seed. Set the seed box gate to the suggested or estimated opening recommended for the seed being calibrated.
3. Weigh a known quantity of seed and record the amount. Use notably more seed than the desired application rate for one acre.

   Remember

   Seed size, shape, density, moisture content, seed treatment, and other factors can affect seeding rates. Even when the seed gate is set to the same position, actual application rates may vary. Always begin calibration with more seed than is required to seed one acre.
4. Place the weighed seed into the seed box designated for the seed type being calibrated. If no recommended seed box is listed, use the seed box specified for the most similar seed type shown in the calibration tables on the previous page.
5. Mark the raised tire with chalk to aid in counting wheel revolutions.
6. Simulate seeding one acre by rotating the raised tire:

   14-hole grass drill: 685 revolutions

   20-hole grass drill: 484 revolutions
7. Collect the seed discharged onto the tarp and weigh it.
8. Compare the discharged seed weight to the target seeding rate, and determine if the target per acre quantity of seed was dispensed.
9. Adjust the seed box flow opening as required, and run the test again if necessary.

Maintenance

Maintenance Safety

⚠ WARNING

Always follow all safety instructions.

- Before servicing, inspecting, adjusting, or lubricating the grass drill, park the tractor and grass drill on firm, level ground in a clean, dry, well-lit area. Shut off the tractor and remove the key.
- Ensure the grass drill tongue weight is fully supported by the jack and that the jack is securely positioned on firm, level ground.
- Relieve all hydraulic pressure and stored hydraulic energy.
- Each time you leave the operator's station, engage the parking brake, shut off the engine, remove the key, and ensure the tractor and grass drill are secured against all movement.
- Follow the following **Safely Jacking and Supporting the Grass Drill** instructions.
- Never enter the area beneath the grass drill to avoid crushing injuries or death.
- Keep hands, feet, clothing, and all body parts away from pinch points and moving components.
- Use correct parts or equivalent. Unauthorized parts may void the warranty. Contact the factory if in doubt.

MS-0006

Safely Jacking and Supporting the Grass Drill

⚠ WARNING

- Follow these instructions. Never work beneath the grass drill. Always support the grass drill on a firm, level surface.
- Before performing maintenance, lower the grass drill jack until the tongue weight fully rests on the jack. If the grass drill must be raised, safely raise it up with jacks and properly support it with jack stands. Perform maintenance only when the grass drill is stable, properly supported, and secured against any movement.
- Always use stable, properly rated 6-ton or greater jacks and jack stands that can support the grass drill's weight.
- Place jacks under a safe location on the frame and support the grass drill using only adequate jack stands at approved support points. Contact Strobel Manufacturing if you are unsure of proper lifting points.

Important

Park the grass drill on a level, clear surface away from people, equipment, high winds, and other hazards. Engage the parking brake, stop the engine, remove the key, and use caution when working on the grass drill.

1. Move the tractor and grass drill onto a firm, level surface suitable for safe jacking and supporting the equipment.
2. On hydraulic grass drill models, relieve hydraulic pressure.
3. Engage the parking brake, shut off the tractor, remove the key, and exit.
4. On hydraulic models, disconnect the grass drill from the tractor hydraulics. Unhitch the grass drill.

5. Unhitch the grass drill.
6. On level ground, place the jacks at the back corners of the grass drill frame and safely lift the grass drill.
5. Raise the jacks, support the grass drill with the jack stands. Verify it is stable and cannot move.
6. Move the tractor a safe distance away.

Grass Drill Approved Support Points

⚠ • Perform the work only on a firm, level surface. Safely raise the grass drill with jacks then support it securely.

• Ensure the grass drill is adequately supported by jack stands at support points or an overhead crane attached to lifting anchors (**L**). Ensure the grass drill can't shift, move, or drop down.

• **Only use jacks, jack stands, or a crane properly rated to support the grass drill and never work under the grass drill.**

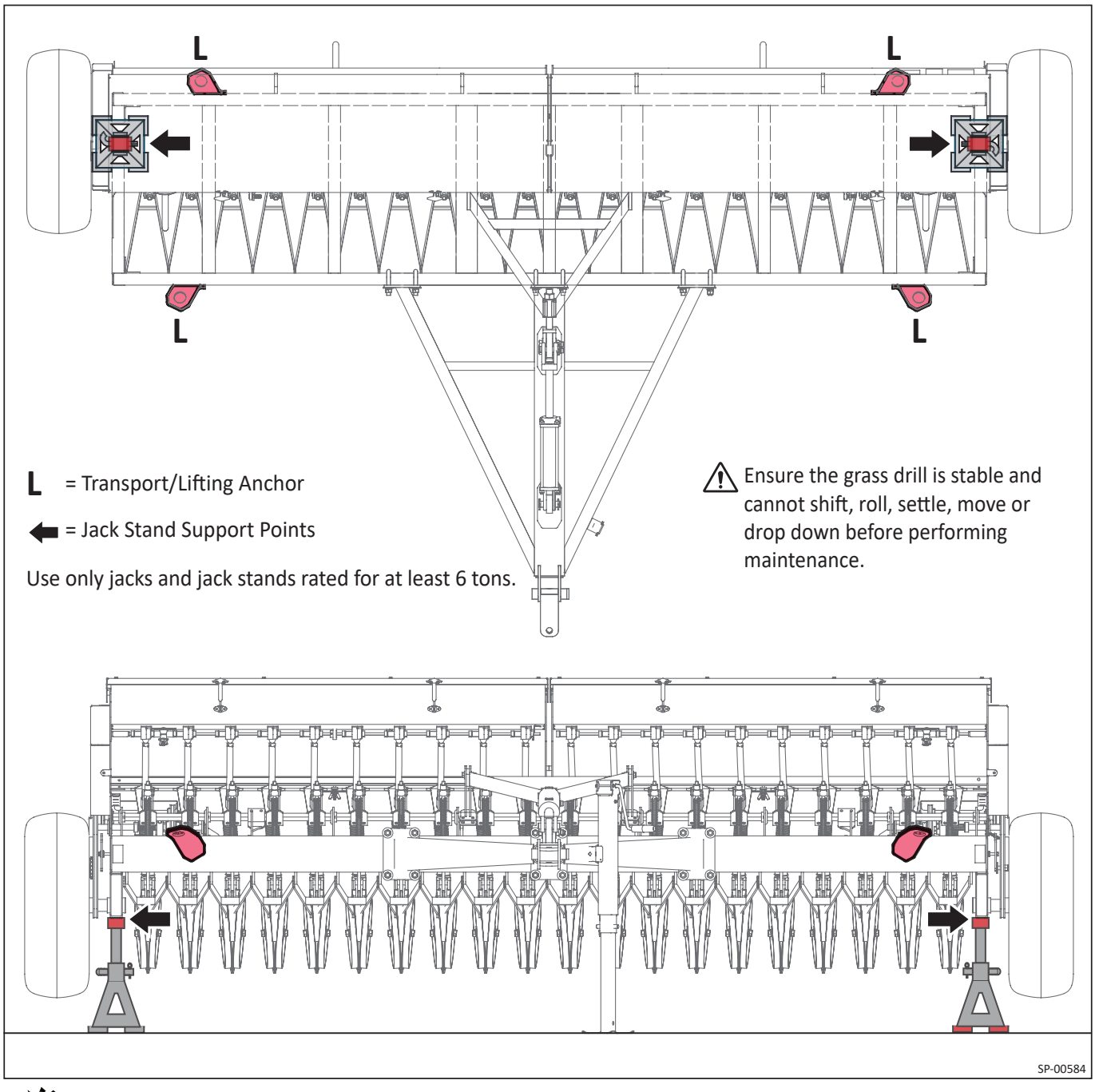

Storing the Implement

Store the grass drill a safe distance away from people and animals. Store it indoors to prevent rust.

Perform the items on this checklist before storing the implement:

1. Clean the grass drill, removing all dirt and material to prevent rusting.
2. Check the grass drill for any loose, damaged, worn or missing parts; make repairs and replacements as required.
3. Apply paint to any exposed metal to prevent rusting.
4. Apply grease or rust preventer to all earth moving surfaces that make contact with the material.
5. Set the grass drill on blocks to prevent: damage, tires from developing flat spots, corrosion, and tire damage.
6. Replace all safety decals, signs, or reflectors that are not in good condition or are no longer easily visble.

Bolt Torque

Bolt Grade Designation

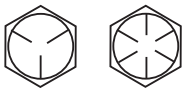

Grade 5 Grade 8

Bolt Diameter	**SAE Grade 5**		**SAE Grade 8**	
	ft-lb	Nm	ft-lb	Nm
3/8”	35	47	50	68
7/16”	55	75	80	108
1/2”	85	115	120	163
9/16”	130	176	175	237
5/8”	170	230	240	325
3/4”	300	407	425	576
7/8”	445	603	685	929
1”	670	908	1030	1396
1-1/8”	910	1234	1460	1979
1-1/4”	1250	1695	2060	2793

Maintenance Schedule

Maintenance Task	Task Frequency
Check for any missing safety decals or signs	Before each use
Clean the grass drill and protect exposed surfaces	After each use
Check for and make any needed repairs, part replacements, or hose replacements	After each use
Lubricate the chains and other lubrication points	Follow the Lubrication Guide and Schedule
Grease the wheel bearings	Follow the Lubrication Guide and Schedule
Check tires/wheels; inflate tires if needed	Daily
Repaint any exposed metal to prevent corrosion	Whenever you notice scratches, chips, or rust
Check all pivot locations for wear or damage	Once a season
Check wheel lug nuts for proper torque	After every 50 hours of use

Lubrication Guide and Schedule

Lubricate all grease fittings with an uncontaminated SAE multipurpose grease suitable for operating conditions.

Grass Drill Lubrication Points

Lube Point	Component	Location	Lubricant Type	Frequency
A	Drive Chains	Grass Drill Side(s), Clutch, Acre Meter	Penetrating, extreme-pressure (EP) chain oil.	Start of each season and then every 180 hours
B	Grass Drill Hitch Grease Zerk	Grass Erill Hitch Bushing	NLGI Grade 2 lithium-complex grease	At the start of each season and then every 8–10 hours
C	Jack Grease Zerk	1 upper end	NLGI Grade 2 lithium-complex grease	As needed
D	Wheel Bearings	2 Bearings per wheel, and 1 Seal per wheel. (Install a new Seal when servicing.)	SAE multipurpose grease uncontaminated and suitable for your conditions	Once each season
E	Clutch Throwout Grease Zerk	On the Grass Drill Clutch Throwout	NLGI Grade 2 lithium-complex grease	At the start of each season and then every 40 hours
F	Ratchet Jack Cylinder Grease Zerks	On the Grass Drill tTongue	NLGI Grade 2 lithium-complex grease	At the start of each season and then every 20–50 hours
G	Grass Drill Pivot Points	Inspect the grass drill to locate any pivot points needing lubrication	Spray-type penetrating oil	As needed

Replacement parts available from Strobel Manufacturing.

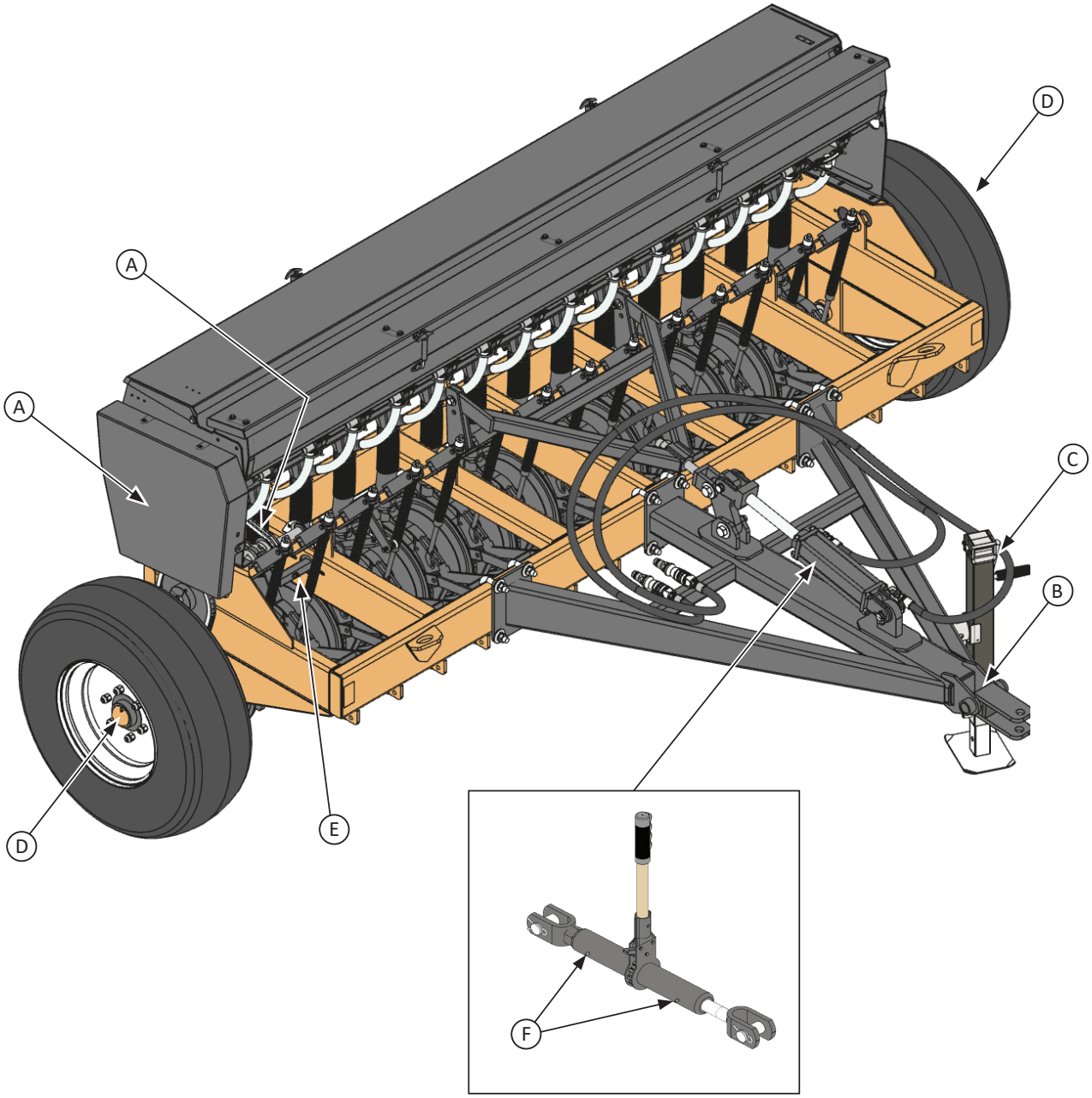
A
A
D
C
B
D
E
F

Replacements and Parts

Replacement and Parts Safety

⚠ WARNING

Always follow all safety instructions.

- Before servicing, inspecting, adjusting, or lubricating the grass drill, park the tractor and grass drill on firm, level ground in a clean, dry, well-lit area. Shut off the tractor and remove the key.
- Ensure the grass drill tongue weight is fully supported by the jack and that the jack is securely positioned on firm, level ground.
- Relieve all hydraulic pressure and stored hydraulic energy.
- Each time you leave the operator's station, engage the parking brake, shut off the engine, remove the key, and ensure the tractor and grass drill are secured against all movement.
- Follow the **Safely Jacking and Supporting the Grass Drill** instructions on page 32.
- Never enter the area beneath the grass drill to avoid crushing injuries or death.
- Keep hands, feet, clothing, and all body parts away from pinch points and moving components.
- Use correct parts or equivalent. Unauthorized parts may void the warranty. Contact the factory if in doubt.

MS-0006

Replacing a Wheel

⚠ WARNING

- Only trained personnel with proper equipment should service tires and wheels.
- Tire and wheel service can cause serious injury or death if performed improperly.
- Do not mount, demount, or inflate tires without proper equipment, training, and experience.

Removing a Wheel

1. Park the equipment on a firm, level surface and make sure there's no possible way for it to move.
2. Move the tractor so it is away from the grass drill.
3. Shut off the tractor and apply the parking brake, remove the key, and ensure it is immovable.
4. Unhitch the tractor and grass drill.
5. Raise and support the grass drill according to the **Securing the Grass Drill for Maintenance** instructions on page 32.
6. Remove the grass drill wheel lug nuts and wheel assembly.

Installing a Wheel and Applying Correct Lug Nut Torque

1. Check the parts list and ensure all parts are present. Contact Strobel Manufacturing if any parts are missing.
2. Reuse the original implement lug nuts or obtain equivalent replacements. Replace any lug nut or wheel stud that is damaged or has damaged threads.
3. Clean the wheel and rim of dirt, debris, and grease with an appropriate cleaner.
4. Lift the tire using only safe lifting methods.
5. Align the wheel with the studs and place it on the hub, and install lug nuts onto two of the studs first.
6. Start all lug nuts by hand to prevent cross-threading.
7. Tighten the lug nuts in the sequence shown below and torque each lug nut to the specified torque value using a calibrated torque wrench.

8 Bolt Wheel Lug Nut Tightening Pattern

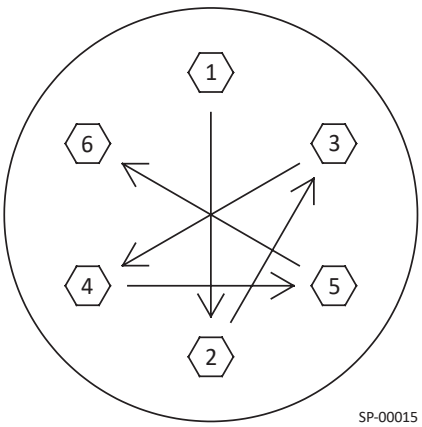

SP-00015

Lug Nut Recommended Torque Values

	Lug Nut Torque Value	
Lug Nut Size	ft-lb	Nm
1/2"-20	70–90	122

Important

Retorque the wheels every 50 hours of grass drill operation.

Grass Drill Tire and Wheel Assemblies

Important

- Ensure replacement tires and wheels match the original size, load rating, and type. Contact Strobel Manufacturing if unsure.
- Inflate tires only in an approved safety cage using a clip-on air chuck and long air hose. Stand clear of the tire and rim trajectory zone during inflation.
- Replace any cracked, bent, excessively corroded, or otherwise damaged tire, wheel, rim, or component.
- Never weld or cut an inflated tire or wheel assembly. Heat can cause a tire explosion.

ID	Part Number	Qty	Description
1	23038005	2	Wheel and Tire Assembly
2			11L-15 Tire
3			15” x 8” Wheel
4	14230004	12	1/2”-20 Grade 8 Lug Nut

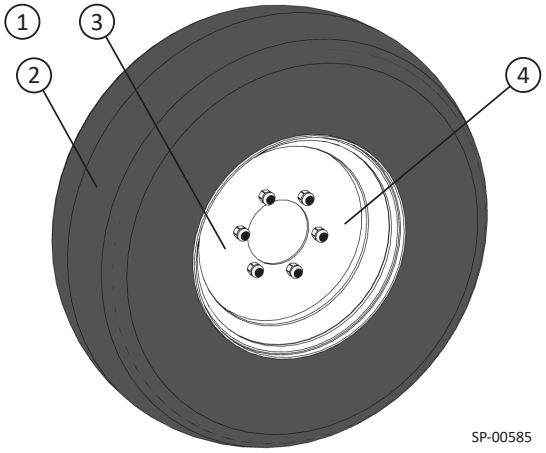

SP-00585

Lug Nut Recommended Torque Values

	Lug Nut Torque Value	
Lug Nut Size	ft-lb	Nm
1/2”-20	70–90	122

Important

Retorque the wheels every 50 hours of grass drill operation.

Grass Drill Spindle and Hub Assembly (2 per Grass Drill)

ID	Part Number	Qty	Description
1	03081000	1	Grease Cap
2	16030312	1	5/32” x 2” Cotter Pin
3	14030002	1	7/8” UNF Spindle Castle Nut
4	23192000	1	7/8” Spindle Washer
5	02030013	1	Bearing Cone
6	02030012	1	Bearing Cup
7	08230005	1	Driven Gear Sprocket Hub
8	14230004	6	1/2”-20 Lug Nut
9	08230002	1	6-Bolt Hub
10	02030023	1	Bearing Cup
11	02030024	1	Bearing Cone
12	19080405	1	Grease Seal
13	19080618	1	Spindle
14	03050004	1	Spindle Cap
15	23060006	1	3/4” Flat Washer
16	23120006	1	3/4” Lock Washer
17	02080069	1	3/4” x 2” G5 Hex Bolt

* 1 or 2 spindle washers may be required to put proper pressure on bearings

Note
The gear sprocket hub (⑦) is a special made part that we make here at Strobel. Consult Strobel to obtain a replacement hub.

See page 20 for the wheel-drive and drive-chain part numbers.

During Hub Installation/Reinstallation:
Tighten UNF spindle castle nut to about 100-150 ft-lb so the hub doesn’t move, then back the nut off slightly by turning the castle nut counter clockwise 2 slots to allow the proper bearing end play.

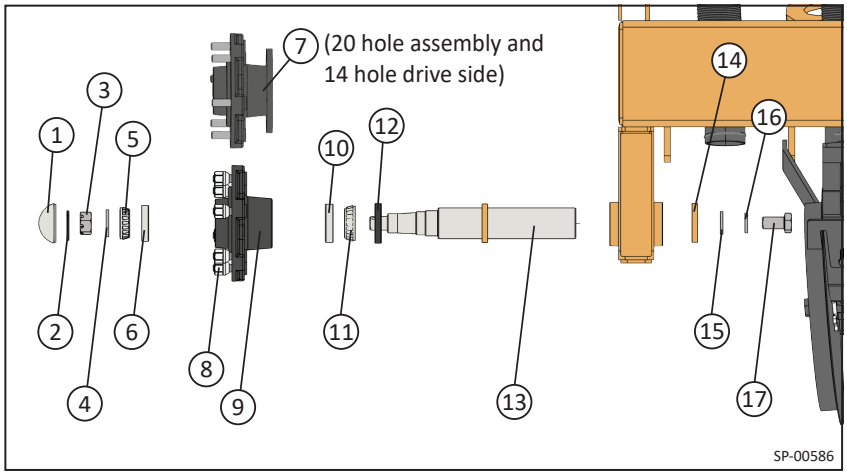

Drive Assemblies Components

Important

Refer to page 20 for **Drive Assembly Main Features Identification** and part numbers.

Bearings, Bearing Flanges, and Bearing Plates

ID	Part Number	Qty	Description
1	06160001	1	1” Bearing Flange
2	06160000	1	3/4” Bearing Flange
3	06020000	1	1” Bearing Flangette
4	06020002	1	3/4” Bearing Flangette

ID	Part Number	Qty	Description
5	02000402	2	1” Bearing with Set Screw
6	02000404	2	3/4” Flange Bearing
7	02040001	14	Disc Bearing
8	16070006	1	Grass Drill Short Bearing Plate

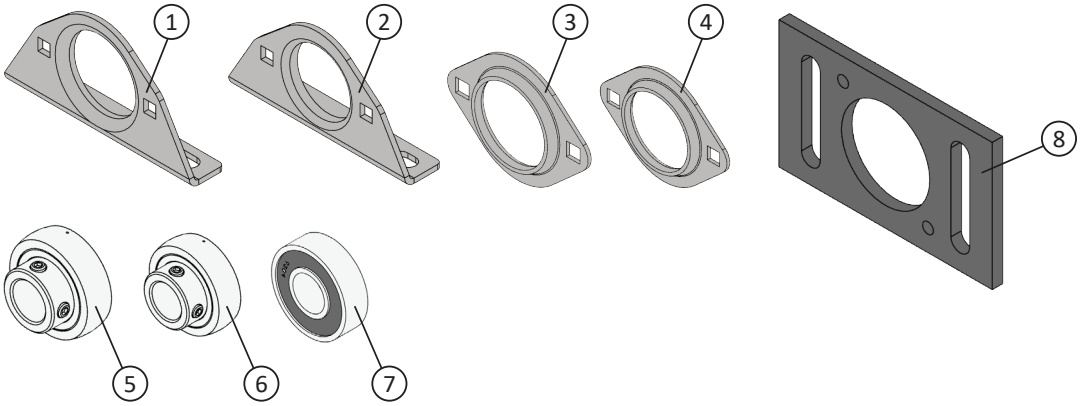

Acre Meter Replacement Parts

ID	Part Number	Qty	Description
1	13010000	1	20 Hole Grass Drill Acre Meter
2	13010001	1	14 Hole Grass Drill Acre Meter

ID	Part Number	Qty	Description
3	07230001	1	Spur Gear
4	07230000	1	Worm Gear

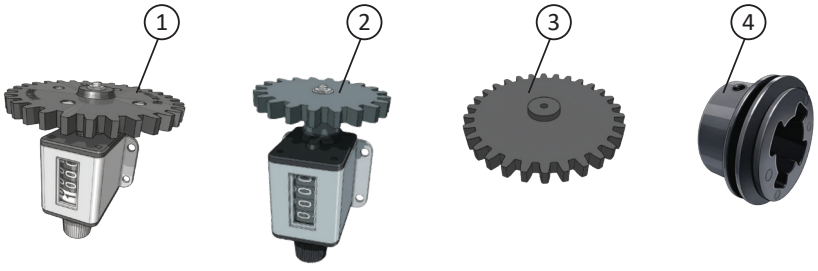

Clutch Assembly Components

ID	Part Number	Qty	Description
1	03120001	2	1” Set Collar
2	19031003	1	Clutch Spring
3	19000009	1	1” x 19” Clutch Shaft
4	18180006	1	E-Style Retaining Ring
5	03100000	1	Clutch Sliding Jaw

ID	Part Number	Qty	Description
6	23030010	1	Clutch Sprocket Weldment
7	03201000	1	Clutch Throwout with Grease Zerk
8	08200000	1	Clutch Throwout Holder
9	02120001	1	Lift-Arm Bracket
10	03201000	1	7/16”-20 Female Ball-Joint Linkage

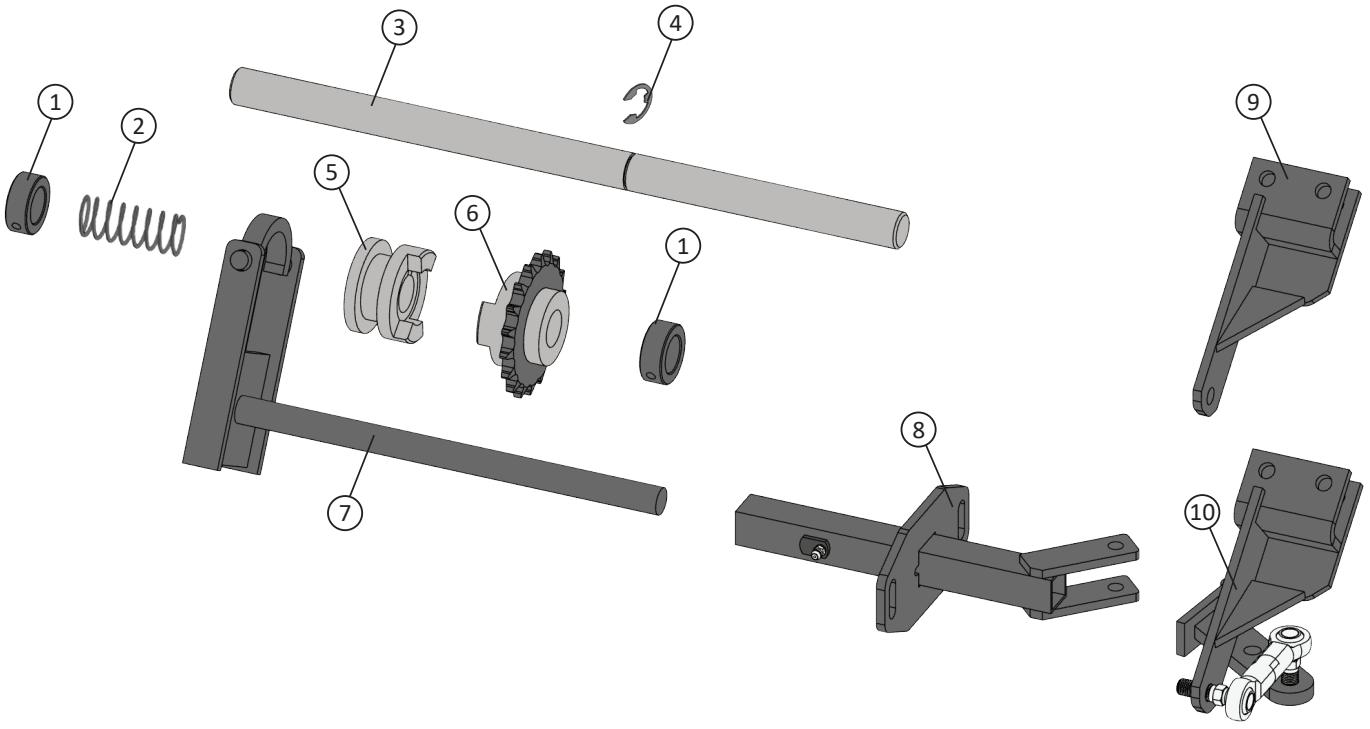

Agitator, Metering Hopper, and Cup Assemblies Components

ID	Part Number	Qty	Description
1	01070000	1	14-Hole Agitator
2	01070001	2	20-Hole Agitator
3	Contact Factory	1	14-Hole Metering Shaft
4	02000408	2	3/4” Agitator Bearing
5	Contact Factory	1	Shaft-End Drive
6	Contact Factory	2	20-Hole Metering Shaft
7	03191000	2	Set Collar
8	23060034	1	Square-Nut Washer

ID	Part Number	Qty	Description
9	19190002	1	Seed Meter Shutoff
10	03190002	1	Seed-Metering Transfer Cup
11	18190100	1	Seed-Metering Roll
12	03190005	1	3/4” Hose Clamp
13	20190014	1	3/4” Diameter Clear PVC Vinyl Hose
14	03190004	1	Metal Seed Cup
15	03190003	2	2” Hose Clamp
16	20190007	1	Rubber Seed Tube

Qty per Subassembly

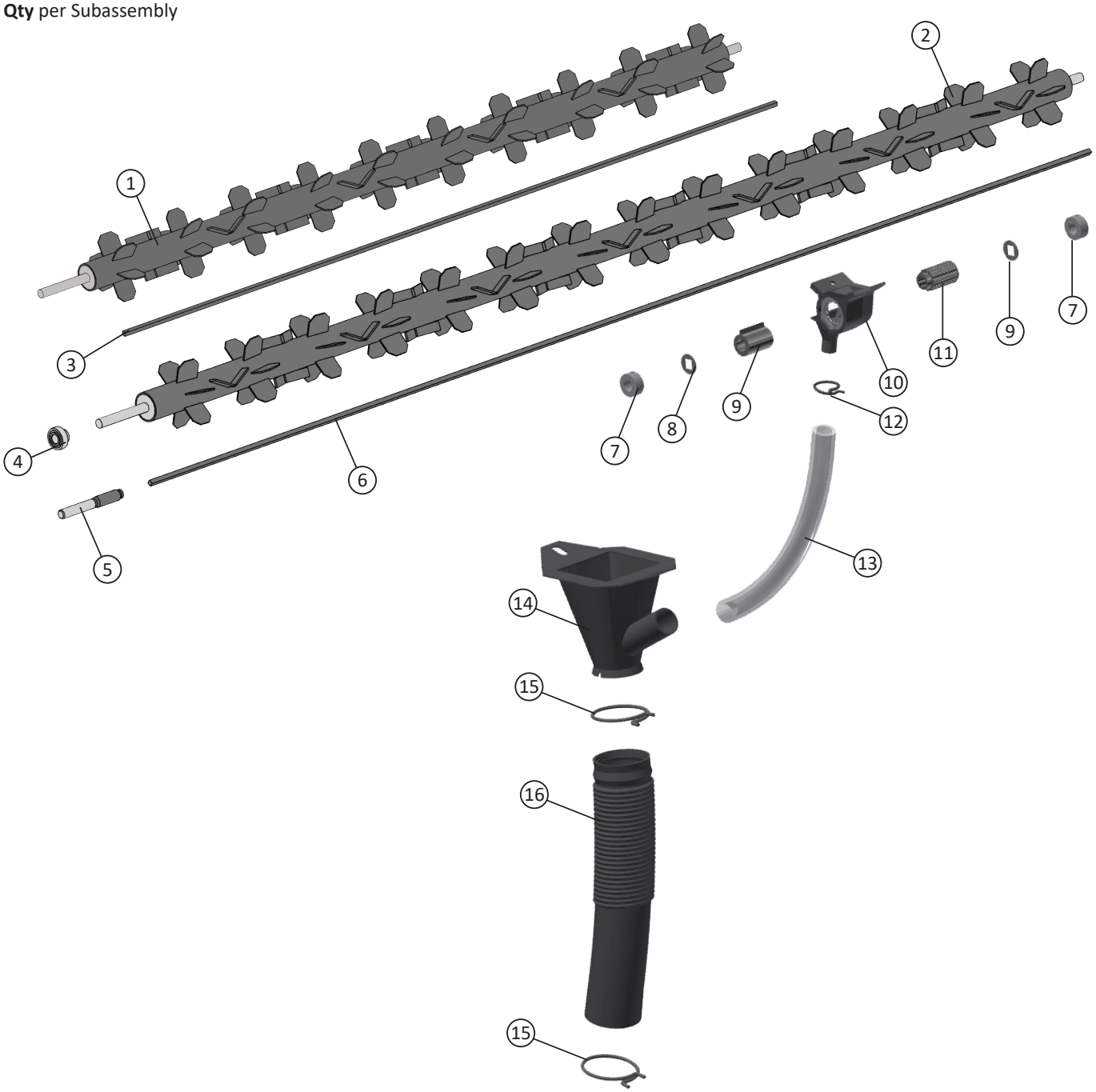

Hydraulic Hoses, Hydraulic Fittings, Hydraulic Cylinder, and Cylinder Hardware

ID	Part Number	Qty	Description
1	03080025	2	-8 Quick-Conn Coupler, 3/4 O-Ring Male
2	08180004I	1	-8 (3/4”-16) Hydraulic Handle Retract
	08180004O	1	-8 (3/4”-16) Hydraulic Handle Extend
3	Contact Factory	1	1/2” Hyd Hose, 3/4-16 O-ring Male, 3/4-16 JIC Female, 96”
4	03000034	1	3” x 8” Grass Drill Cylinder

ID	Part Number	Qty	Description
5	06080004	2	90° Elbow, 3/4-16 JIC Male, 3/4-16 O-ring Male
6	16001253	2	1” x 3-5/8” Cylinder Pin
	16030300	2	3/16” x 2-1/2” Cotter Pin
7	Contact Factory	1	1/2” Hyd Hose, 3/4-16 O-ring Male, 3/4-16 JIC Female, 108”

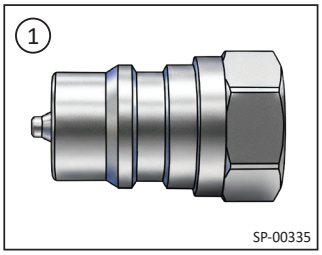

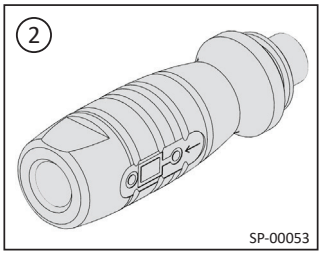

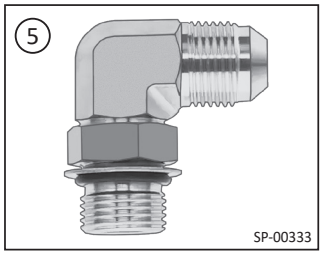

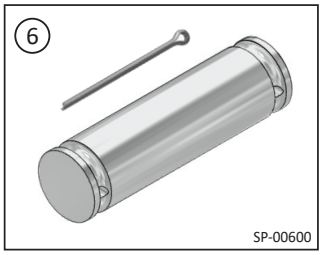

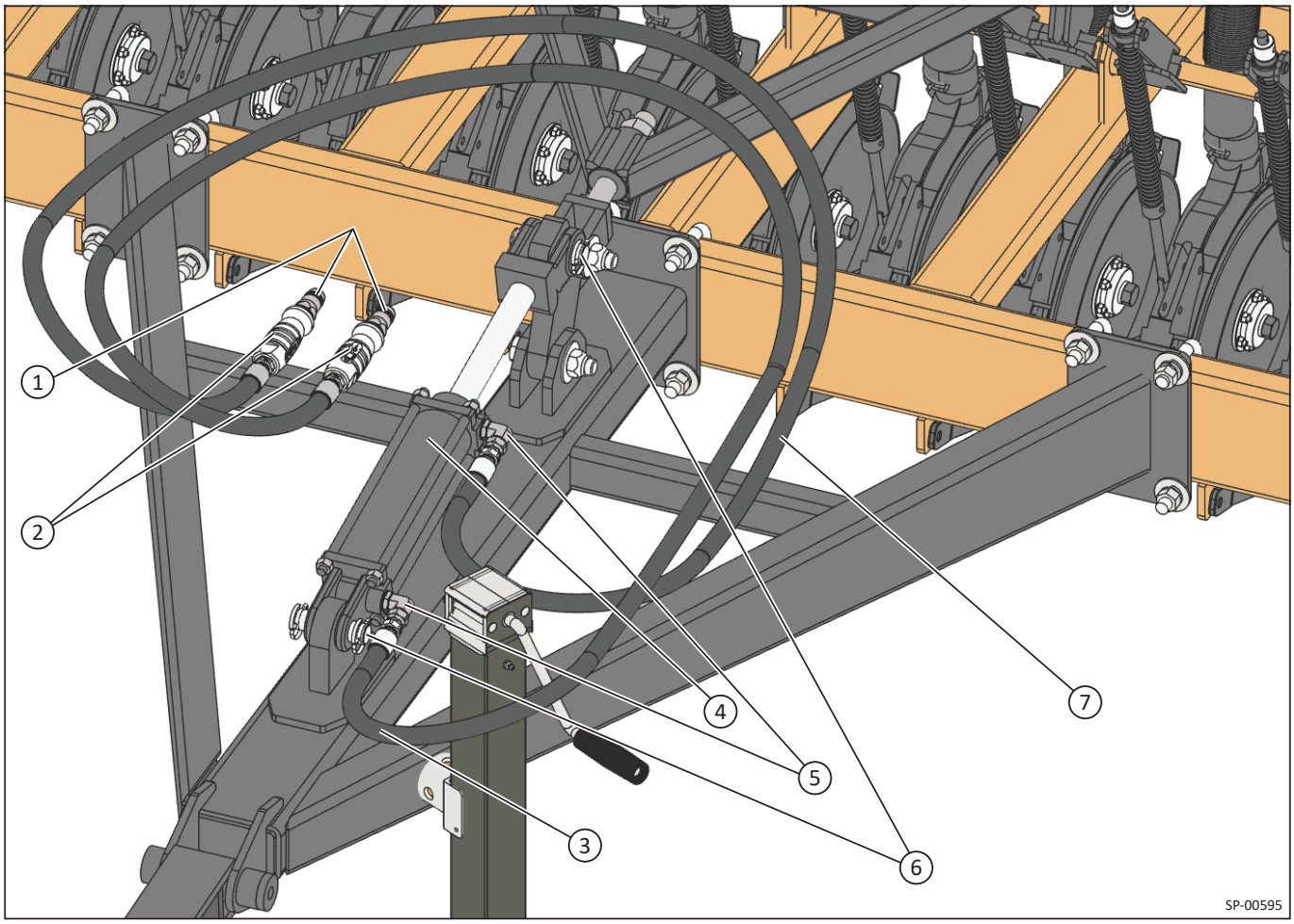

④ See page 49 for the optional heavy duty ratchet jack cylinder assembly ID illustration and part number.

Seed Boot, Disc, and Drag Chain Assemblies Components

ID	Part Number	Qty	Description
1	01190100	1	Seed Boot Assembly & Disc Assemblies
2	14080000	2	1/4” Hex Nut
3	23120000	3	1/4” Lock Washer
4	02080055	1	5/8” x 1-1/2” Grade 5 Hex Bolt
5	23120005	2	5/8” Lock Washer
6	03020002	2	Disc-Bearing Cap
7	03020000	2	Disc-Bearing Retainer
8	02040001	2	Disc Bearing
9	23040001	2	Disc-and-Band Weldment
10	02080093	12	1/4” x 1/2” Grade 5 Hex Bolt
11	02190301	1	Seed Boot
12	02080163	1	5/8” x 1-1/2” Reverse-Thread Hex Bolt
13	01040000	1	Right Disc and Hardware Assembly
14	01040001	1	Left Disc and Hardware Assembly

ID	Part Number	Qty	Description
15	03000075	2	1” OD x 1/2” ID x 0.875” Collar
16	19190321	2	Set Screw
17	02120001	1	Lift Arm Bracket
18	Contact Factory	1	Cotter Pin
19	18040000	1	Disc Lift Rod
20	19040025	1	Lift Rod Spring
21	12040000	1	Disc Lead Bracket
22	14120007	1	1/4” Nylon Lock Nut
23	23060000	1	1/4” Flat Washer
24	19190019	1	Seed Boot Grass Drill Plate
25	19031011	1	13/32” x 9/32” x 1-3/4” Spring
26	02080004	1	1/4” x 3” Grade 5 Hex Bolt
27	03040000	1	Drag Chain

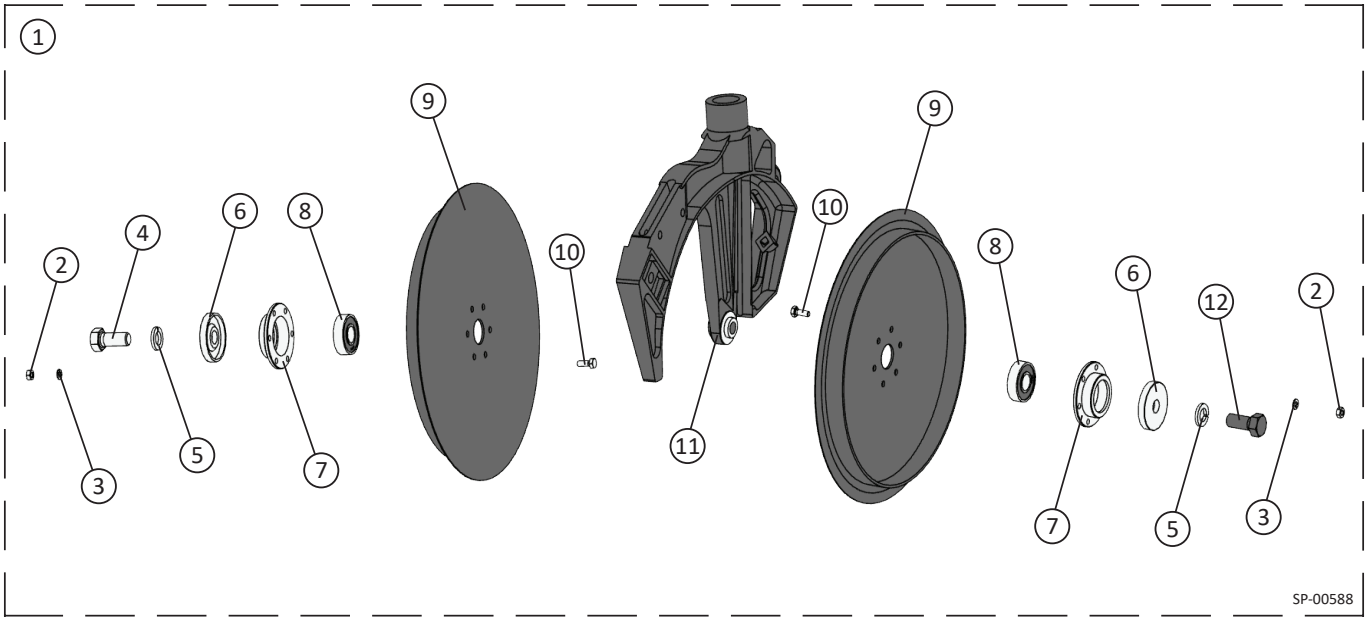

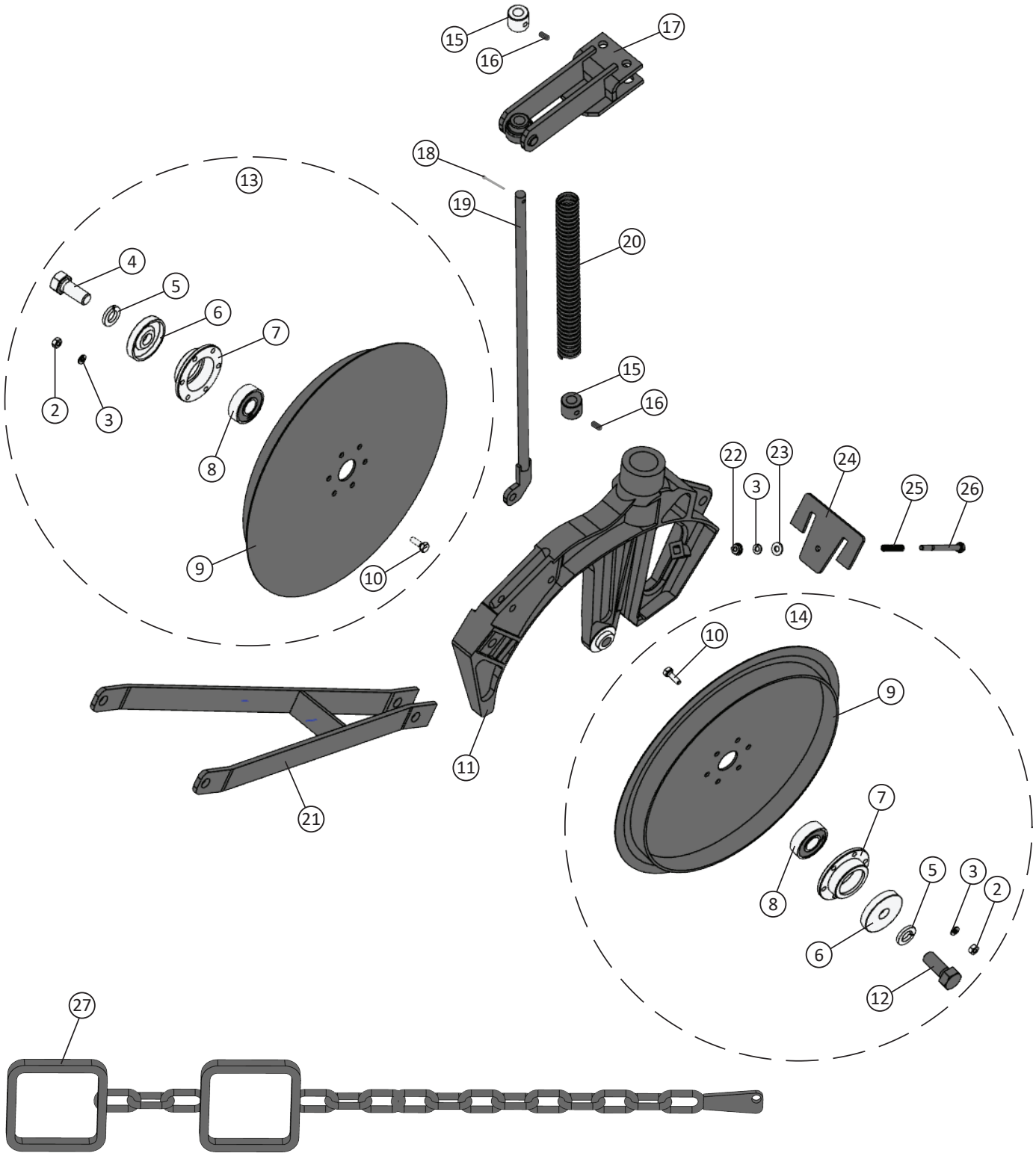

* The standard drag chain is shown. Other drag chain configurations are available.

Pins, Bolts, Washers, Hardware, Ratchet Cylinder, Tongue, Hitch, and Miscellaneous

① 1/2" O.D. x 2-1/4" Hex Bolt
02020001



1/2" Flat Washer
(2 per bolt)
23060004

1/2" Nylon Lock Nut
14120003

② 3/4" x 3-1/2" Hex Bolt
02080072



3/4" Flat Washer
(2 per bolt)
23060006

3/4" Nylon Lock Nut
14120039

③ 5/8" x 6-1/4" Inside Dimension
x 4-1/8" Top of U-bolt to Bottom of Leg
02210001



5/8" Flat Washer
(2 per U-bolt)
23060005

5/8" Lock Washer
(2 per U-bolt)
23120005

5/8" Hex Nut
14080005

④ 3/8" x 1" Hex Bolt
02080023

3/8" Flat Washer
23060002

3/8" Lock Washer
23120002

3/8" Hex Nut
14080002

Small Seed Box Hinge Bracket
16080179

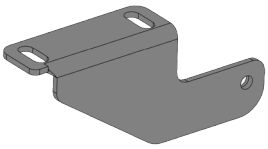

⑤ 3/8" x 1" Hex Bolt
02080023

⑥ 1/4” x 1” Hex Bolt
2080000

1/4” Flat Washer
23060000

1/4” Lock Washer
23120000

1/4” Hex Nut
14080000

25 lb Gas Spring
19072008



⑦ 1/2” O.D. x 2” Hex Bolt
02080044

1/2” Flat Washer
(2 per bolt)
23060004

1/2” Nylon Lock Nut
14120003

⑧ Seed Box Hold Down and Latch
12200000

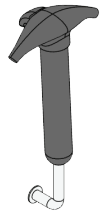



1/4” x 1” Socket Head
Contact Factory

⑨ Optional Heavy-Duty Ratchet Jack
Cylinder Assembly
10180000

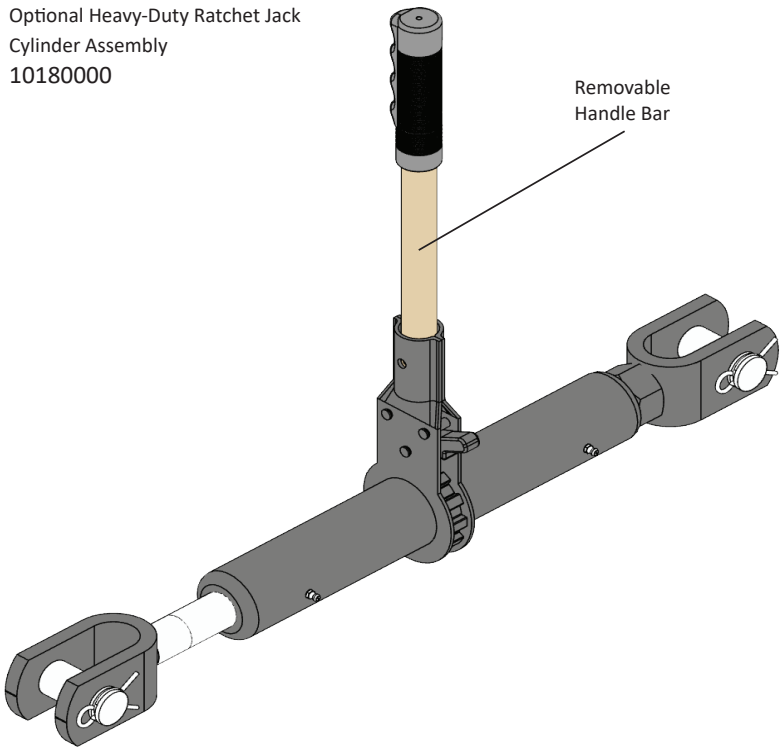

SP-00631

Troubleshooting

Trouble	Problem	Cause / Solution
Acre meter doesn't measure accurately	Incorrect tire size or air pressure	Use the specified tires and tire air pressure. Check the tire sidewall for proper PSI.
	Actual field area is different	Verify the field area
	Acre meter needs replacement	Replace the acre meter
Pin or pin bolt is seized	Pin or pin bolt does not move freely	Remove, clean, inspect, and reinstall the pin/bolt
		Replace it if damaged or worn.
Discs do not turn freely	Mud or debris buildup on the discs	Clean the discs
	Worn disc bearing	Replace the disc bearings
Seed boxes do not empty evenly	The seed-distribution assemblies are blocked	Clean the seed-distribution components
	Seed box opening needs adjustment	Adjust the seed box opening lever
Seeding rate differs from the desired rate	Incorrect tire size or inflation pressure	Use the specified tires and maintain the specified tire inflation pressure. Check the tire sidewall for proper PSI.
	Seed-treatment buildup in the seed delivery assemblies	Clean the seed delivery components
	Improper seed delivery setting	Adjust the seed delivery lever; recalibrate
Uneven seed depth	Excessive operating speed	Reduce speed down to 5–6 MPH
	Mud buildup blocking seed distribution	Remove the mud buildup
	Soil is too wet for planting	Wait for drier soil / soil conditions to improve
Uneven seed spacing	Excessive operating speed	Reduce speed down to 5–6 MPH
	Seed-delivery system is plugged	Clean out the seed-delivery components
Hydraulic system does not operate properly	Hydraulic couplers are incorrectly connected or not fully seated	Relieve hydraulic pressure, disconnect and reconnect the couplers, and ensure they are fully seated. Refer to the tractor operator's manual

Quick Reference Index

C
Calibrating the Grass Drill Seeding Rate for the Specific Seed Type *31*

D
Drive Assembly Main Features Identification *20*

G
Grass Drill Seed Rate Calibration *30*
Grass Drill Specifications *21*

I
Installing a Wheel and Lug Nut Torque *39*

L
Large Seed Box Drill Settings *30*

M
Maintenance Schedule *35*

O
Operating Safety *15*

S
Safety *6*
Select the Appropriate Seed Box to Load For Your Seed *28*
Small Seed Box Drill Settings *30*
Some Grass Drill Common Uses *28*

FARM EQUIPMENT MANUFACTURERS ASSOCIATION
FEMA FarmEquip.org
MEMBER

SINCE 1946

Made in America

Since 1946 Strobel Manufacturing has been designing and building innovative, durable products that solve real-world problems. Every piece of equipment is built for rugged daily use – robust and durable. We call it Strobel Strong. Welcome to the Strobel family.

© Strobel Manufacturing, Inc. 2026 | All rights reserved.

Strobel

strobelmfg.com |
sales@strobelmfg.com

105 S. Green Street
Clarks, NE 68628
308.548.2254