EARTH MOVING SERIES

FE 1611 Forced-Ejection Scrapers

Operation, Maintenance, and Parts Manual

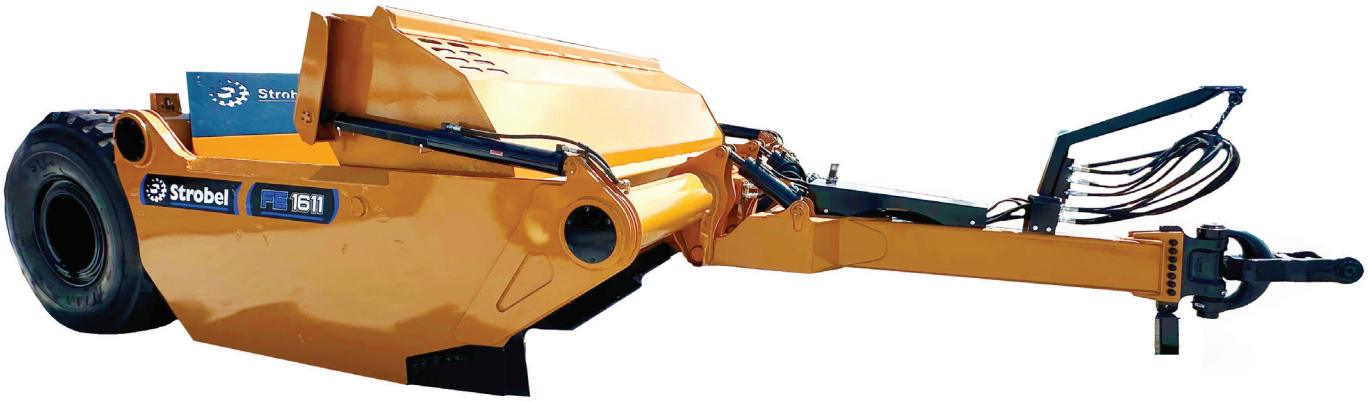

DO NOT OPERATE THIS EQUIPMENT UNTIL THIS MANUAL HAS BEEN READ AND UNDERSTOOD.

Part Number: 13500007
Original Instructions

Serial Number and Product-Specific Information

- The scraper serial number is located as shown below.
- When ordering parts, requesting service, or requesting other information, always provide the dealer with the scraper serial number.
- Record the following information for easy reference.

Model Number		Serial Number			
Date of Purchase					
Dealer		Dealer Phone Number			
City		State		Zip	



Contents

Serial Number and Product-Specific Information 3

Safety 6

Safety Alert Symbol and Signal Words 6

General Safety Information 6

Safety Decals 7

Safety Decal Details and Locations 7

SMV and SIS Signs 9

Before Operating 10

Transport Safety 11

Gate and Push-Off Crush, Pinch, and Striking Hazard Zone 12

Working On or Near This Scraper 13

Hydraulic Power and Pressurized Oil Safety 14

Wear Personal Protective Equipment 15

Prepare for Emergencies 16

Operation 17

Operating Safety 17

FE Scraper Features 17

Scraper Orientation 17

Scraper Main Features Identification 18

FE Scrapers Specifications 19

Tractor Operational Considerations 19

Preparation for Scraper Use 20

Preparing the Tractor 20

Turning the Hydraulic Cylinder Lock Valve ON or OFF 21

Hitching/Unhitching the Scraper 22

Moving the Tractor Into Position, Connecting Hydraulics, and Hitching the Scraper 22

Unhitching the Scraper 22

Checking the Scraper Before Operating or Transporting 23

Verifying the Equipment is Ready Before Operation or Transport 23

Visually Inspecting Before Operation or Transport 23

Preparing the Hydraulic System for Operation 24

Safe Operation on Slopes and Grades 25

Transporting the Scraper 26

Before Transporting 27

During Transport 27

FE Scraper General Operation 28

Maintenance *29*
Maintenance Safety *29*
Securing and Supporting the Scraper for Maintenance *29*
Jacking and Supporting the Scraper for Changing a Tire *30*
Securing and Supporting the Scraper to Replace the Blades *31*
Bolt Torque *33*
Storing the Implement *34*
Maintenance Schedule *34*
Checking for Proper Tire Pressure *34*
Lubrication Guide and Schedule *35*
FE Scraper Lubrication Points *35*
Replacing a Wheel *36*
Removing a Wheel *36*
Installing a Wheel and Applying Correct Lug Nut Torque *36*
Replacements and Parts *37*
Replacement and Parts Safety *37*
Replacing the Blades *38*
Removing the Blades and Installing New Blades *38*
FE 1611 Tire and Wheel Assemblies *40*
Spindle and Hub Assembly *41*
Roller Carriage Assemblies *44*
Blades, Blade Bolts, and Hydraulic Cylinders *45*
Standard FE Scrapers, Frontal Hydraulic System Fittings and Hoses *46*
Standard FE Scrapers, Frontal Hydraulic System Fittings and Hoses *48*
FE1611 Hitch Assembly *50*
Troubleshooting *51*
Quick Reference Index *52*

Safety

Safety Alert Symbol and Signal Words



- This safety symbol indicates an important safety message in this manual.
- When you see this symbol, be alert to the possibility of injury or death.

Signal Words: Be aware of the signal words **DANGER**, **WARNING**, **CAUTION**, and **NOTICE**. These signal words indicate a level of safety risk.

DANGER Indicates extremely imminent hazards where death or serious injury will result if these hazards are not avoided.

WARNING Indicates hazards at hand where death or serious injury likely could occur if these hazards are not avoided.

CAUTION Indicates hazards at hand where personal injury likely may occur if these hazards are not avoided.

NOTICE Used to convey important information that is not related to personal safety, such as maintenance, cleaning guidelines, avoiding implement damage, and the like.

GS-0001

General Safety Information



All safety information in this manual is essential and is intended to assist in identifying and preventing incidents that could cause injury, death, or property damage. *Read, understand, and follow this manual and all safety instructions before operating, maintaining, or working near this equipment.*

- **Safety is your responsibility.** As the owner, operator, or supervisor you need to know and be alert to the specific requirements, precautions, and hazards that exist and to make these known to all personnel working with the equipment or in the equipment area, so they too may take any necessary safety precautions that may be required.
- **Prevent accidents by anticipating the result before the accident is caused.** As an owner, operator, or supervisor you are responsible.
- **Allow only experienced personnel to operate this equipment.** Operators need to be trained and familiar with this type of equipment.
- **Never use the equipment for purposes or applications it is not designed for.**
- **Never use any equipment that is damaged or has become unsafe.**

GS-0000

Safety Decals

- Ensure all safety decals/signs are present in each designated location, and install new decal(s) if any are missing or unreadable.
- Ensure replacement parts display the same safety decals.
- Contact Strobel Manufacturing to obtain free replacement safety decals.

SA-0005

Safety Decal Details and Locations

- Following are Safety Decal Identification Images of scraper decals with locations drawings showing where these decals attach to each scraper model, along with the decal part number.
- Safety decals draw attention to safety concerns, precautions, and possible hazards.

SA-0006

(A) Caution Pinch Point, 04039100



(B) Warning High Pressure Fluid Hazard, 04039113



(C) Grease Point, 04078007



(D) Reflector Decal, 18190101

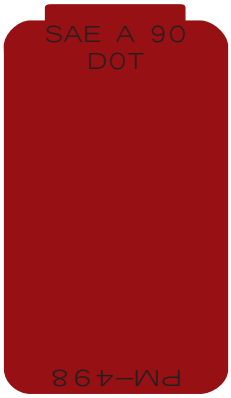

(E) Reflector Strip



Safety Decals Locations

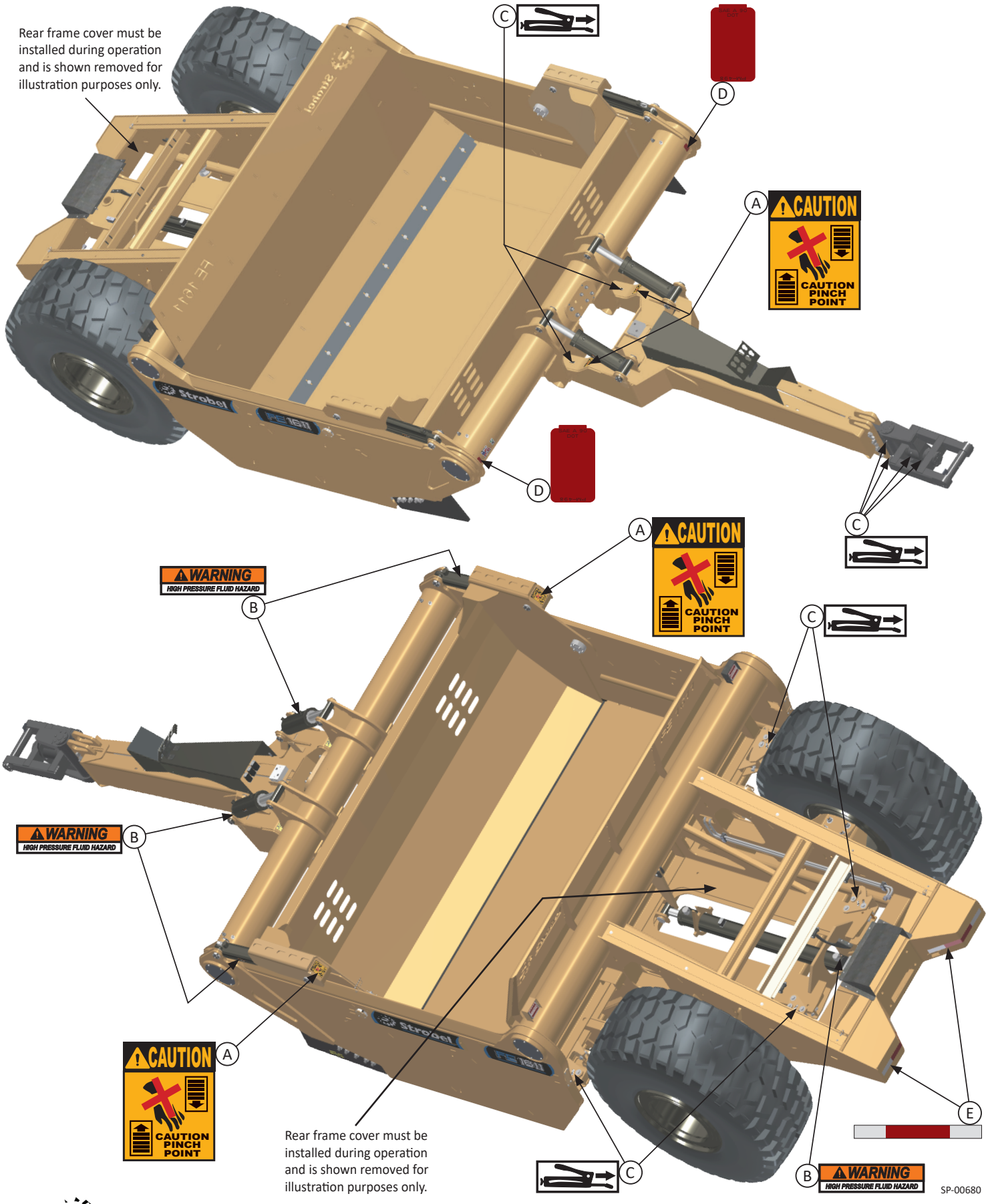

Hitch Decals Locations

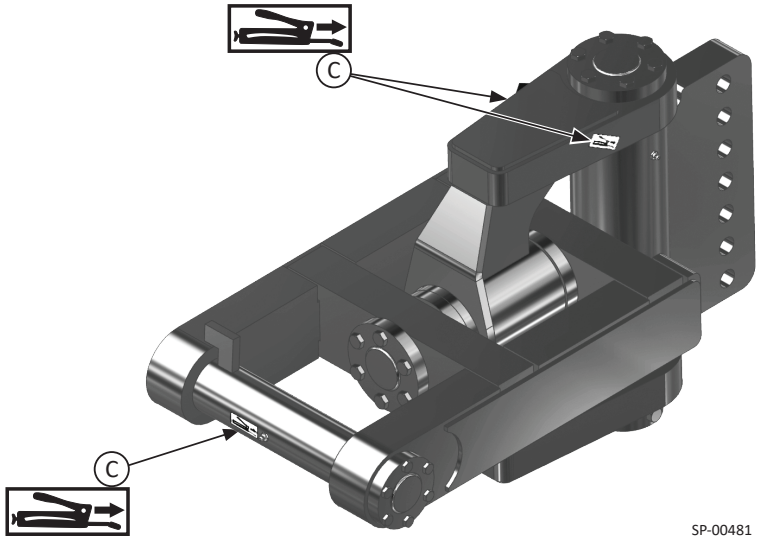

SMV and SIS Signs



- When transporting this equipment, make sure it has a slow-moving vehicle sign (SMV) installed in a location on the rear end of the equipment visible to other vehicles from 500’ away.
- Install this emblem at a height of approximately 2’–6’ from the ground.



- When required by local regulations, install a Speed Identification Symbol (SIS) sign in a visible location on the back of the equipment.

Before Operating

⚠ WARNING

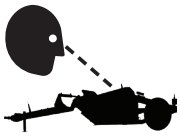

- Walk around the equipment and inspect it. Do not operate a scraper with damaged parts, tires, or wheels. Do not operate a scraper with missing parts or lug nuts.
- Check tire condition and make sure the tires have proper pressure.



- Never allow anyone who is untrained or underage to drive the towing tractor/vehicle or to operate the equipment. Refer to the applicable laws and safety rules within the local jurisdiction.



- Keep children, untrained persons, any others, and animals away from the equipment when it is parked, operating, or moving. Never allow anyone to ride on or be on the scraper.



- Always ensure all persons, animals, buildings, and objects are clear of the equipment path and work area. Prevent striking, crushing, or running over persons or obstacles.



- Make sure to always wear a seat belt. The equipment could accidentally overturn, strike an obstacle, or come to an abrupt stop. Wearing seat belts help reduce the chances of serious injury or death.



- Before starting any earth moving or excavation, you must call the local utility notification service and all underground utilities must be properly located to stay safe. (Many states require contacting the diggers hotline 2–3 days before earth moving begins.)

- In the US, OSHA rules and regulations apply when the machine is used in a workplace or with employees.
- Regulations pertaining to scrapers may differ depending on its use. Agricultural use may be treated differently than construction or commercial hauling. Definitions vary by state.
- Ensure all safety devices are properly installed and that none are missing, damaged or disabled.
- Ensure tractor drawbar, hitch pins, and safety locks are all in place and ready for towing.
- Ensure the scraper hydraulic hoses are properly connected to the tractor hydraulic couplers and that hoses are routed properly to prevent kinking, pinching, and damage during operation or transport.
- Understand that scraper transporting, travel between work areas, hauling, and unloading are each different types of scraper operation. Always follow all applicable operation safety instructions.
- Read, understand, and follow the tractor operator's manual.

BB-0007

Transport Safety

⚠ WARNING

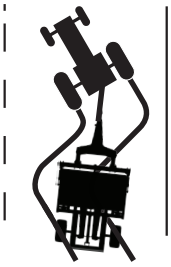

- Use safe driving techniques for snow, ice, and the current driving conditions. Avoid driving with this equipment in darkness or low-light. Refer to the tractor operator's manual.

- Use a tractor of adequate size, weight, and towing capacity for the scraper and its intended load.
- Before transporting the scraper, fully close the hydraulic cylinder/blade locking valve.
- Adhere to all road safety laws and rules that apply within the local jurisdiction, including those pertaining to transport. Size, weight, permits, and driver qualifications regulations may apply. Be aware an FE Scraper can exceed road, weight, or bridge weight limits. Compliance is your responsibility.
- Before operating or transporting this equipment, ensure all required lights, markings, reflectors, warning flags, slow-moving vehicle (SMV) emblems, and other safety devices are properly installed, clean, functional, and clearly visible. Verify that all safety equipment required by law is present and in proper working condition.
- Before road travel, off-property use, or operation, verify all applicable legal requirements with the appropriate local authorities.
- Choose only safe roads and driving surfaces without holes or dips; reduce speeds if the road or ground is rough, uneven, or slippery. Don't drive the scraper where ground could give way, near edges of inclines, dangerous edges, springs, or near bodies of water.
- Check clearances carefully and use caution when moving or operating the equipment around bridges, buildings, fences, ditches, etc.
- Stay clear of overhead power lines, electrical power devices, and electrical equipment.
- Check clearances, use caution when operating around obstructions, ditches, overhead power, etc.

TS-0006

Gate and Push-Off Crush, Pinch, and Striking Hazard Zone

⚠ WARNING

- The gate and push-off area of the FE scraper, including the area within 40 in. (1 m) of these components, is a Gate and Push-Off Crush, Pinch, and Struck-By Hazard Zone. Stay clear of this zone during operation and whenever movement of the gate, push-off, hydraulic cylinders, or related components is possible.
- Unless the scraper is fully lowered or properly supported as instructed in this manual, all hydraulic pressure has been relieved, and the gate and push-off are secured against movement, keep all body parts out of this zone.
- The Gate and Push-Off Crush, Pinch, and Struck-By Hazard Zone is limited to the gate and push-off area. Whenever the tractor can move the scraper, a larger striking and runover hazard zone exists around the tractor, scraper, and their potential travel path. The size of this hazard zone varies with operating conditions and machine use. Keep all persons clear of the tractor, scraper, and travel path whenever the tractor could move the scraper.

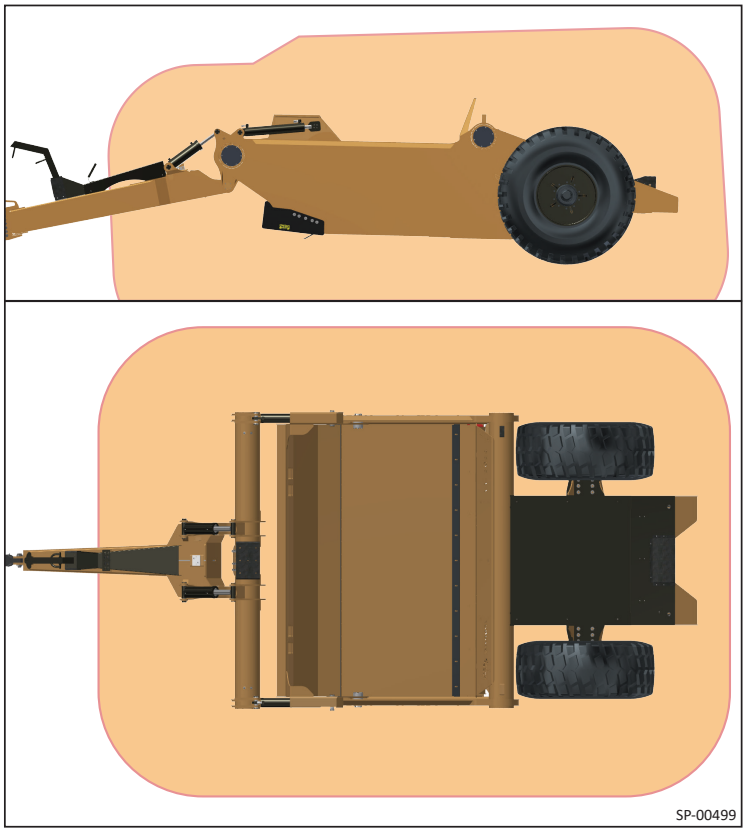

Working On or Near This Scraper

⚠ WARNING



- Never work on, under, or around the scraper unless it is securely blocked and properly supported. Use support devices and jacks that are in good condition and rated for the load. Ensure the scraper and all components are stable and cannot fall, shift, roll, or move unexpectedly. Failure to properly support the equipment could result in crushing injuries, amputation, or death.

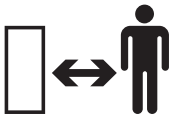

- Never allow anyone to be where they could be struck, crushed, or run over by the equipment.



- During hitching, unhitching, and always, check that you and all others are in a safe location that prevents anyone from getting crushed. Make sure no one can get crushed between the scraper and a tractor, or the equipment and a structure.
- Before performing maintenance, including lubrication, shut off the tractor. Ensure the tractor and scraper are on solid, level ground and are secured against movement before beginning work.



- Always keep hands, feet, and body clear of the scraper, cylinders, arms, hinges, hitch, pins, etc., and any other pinch points.
- Completely prevent becoming entangled in the equipment. Don't wear loose-fitting clothing, accessories, dangling items, baggy clothes, draw strings, etc. Secure or tie back long hair.



- Tire blow-out, rim failure, or explosive tire separation may cause injury or death. Only allow trained persons to service wheels and tires.



- Hydraulic fluid, lubricants, and grease are: poisonous, known to cause cancer, and known to cause reproductive harm. Ingesting these petroleum products can kill.

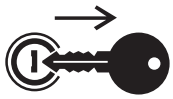

- Always shut off the tractor engine and relieve all hydraulic pressure before performing maintenance on this scraper.

⚠ WARNING



- Only allow trained personnel with proper equipment to service or maintain tire and wheel assemblies.

- Use only safe work practices, methods, and procedures.
- Never allow maintenance or work to be performed on a scraper when it is hydraulically raised. Make sure the scraper is fully lowered and properly supported.
- Make sure the scraper is free of unnecessary sharp edges, and be careful to avoid cuts from sharp edges.
- Always use correct tools and equipment.

Hydraulic Power and Pressurized Oil Safety

⚠ WARNING



- Escaping hydraulic fluid under pressure can penetrate the skin and cause serious injury, infection, or death. Use cardboard or wood to check for hydraulic system leaks. Never use your hands. Get immediate medical help if hydraulic fluids penetrate body tissue or injure.



- Always relieve all hydraulic system pressure before disconnecting from the tractor hydraulic system, making any adjustments, or performing maintenance on the hydraulic system.

- Always purge the air from the hydraulic system before operating.
- Never raise the tractor hydraulic system pressure above 3,000 psi. Implement hoses could burst.
- Position hoses and fittings carefully to prevent failure due to kinking, pinching, crushing, rubbing, and weather exposure over time. Prevent hoses from being struck.
- Check hydraulic hoses and fittings periodically to prevent these from failing. Make sure all fittings, clamps, and hoses are installed properly and in good condition.
- Always repair any oil leaks. Repair any hoses that are kinked, crushed, weather cracked, or worn.
- If an accident occurs, seek medical attention immediately.

Wear Personal Protective Equipment

⚠ CAUTION



- Always wear proper personal protective clothing and equipment appropriate for each task.
- Wear proper eye protection near flying particles, when near a hydraulic system/pressurized fluids, and when around potential eye hazards.



- Wear steel-toed shoes during operation or when working on this equipment.



- Wear hearing protection whenever noise levels may cause hearing damage.
- Avoid wearing anything that could impair hearing such as earbuds or headphones.



- Wear protective work gloves.



- Wear high-visibility clothing when assisting operation or whenever you are in the work area of the tractor and/or scraper.

PP-0002

Prepare for Emergencies

⚠ CAUTION



- Keep a properly stocked first aid kit readily available.



- Keep a properly charged fire extinguisher readily available.



- Keep an emergency contact list for medical, fire, rescue services nearby and on your phone.

GS-0003

Operation

Operating Safety

⚠ WARNING

Read, understand, and follow all safety instructions in this manual, on the safety decals, and in the tractor manual before operating this equipment. Always follow all safety instructions.

- Identify, anticipate, stay alert to, and assess the safety risks of each potential hazard.
- Read and follow the **Before Operating Safety** section on page 10 of this manual before starting operation, and refer to this manual's **Safety** section starting on page 6.
- Check that tractor brakes work properly before transporting or operating on inclines.
- Prevent crushing injuries. During hitching, unhitching, and all other operations, ensure no one is between the tractor and scraper or between the equipment and any structure.
- Keep people, animals, buildings, and objects clear of the scraper path and work area. Prevent striking, crushing, or running over persons or obstacles.
- Operate the scraper only from the tractor operator's seat.
- Always maintain control of the scraper and travel at a safe speed that allows you to do so.
- Operate safely on snow, on ice, and for current conditions; avoid working in the dark. See the tractor manual.
- Every time before exiting the tractor operator's station, put the transmission in park, lower the scraper, set the parking brake, turn off the engine, remove the key, and wait for all movement to stop.

OP-0007

FE Scraper Features

Scraper Orientation

FE With Tongue

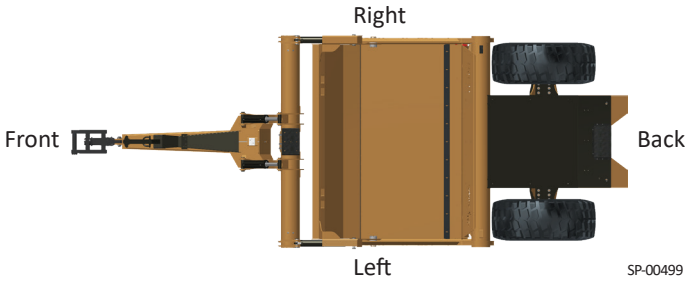

SP-00499

Scraper Main Features Identification

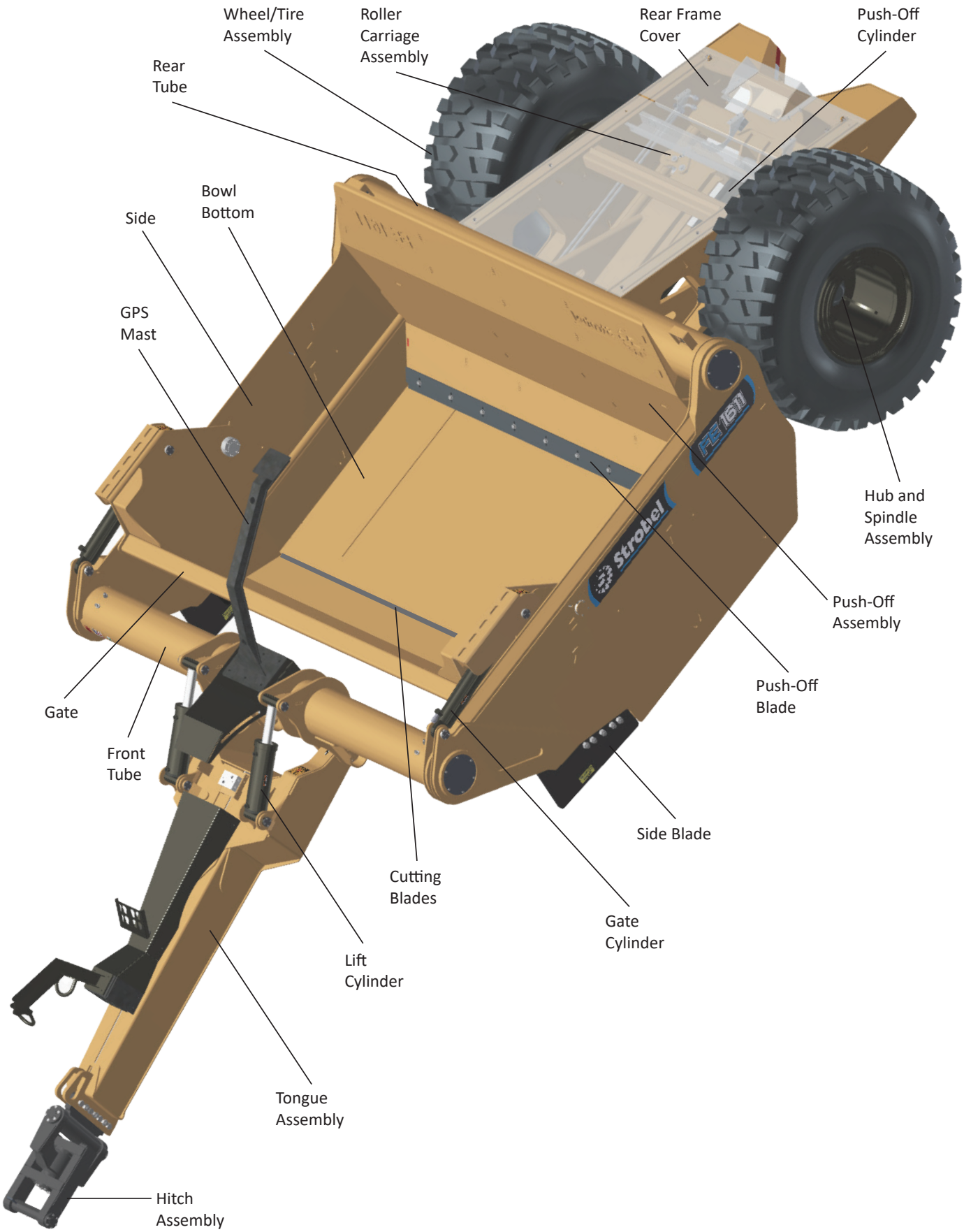

FE Scrapers Specifications

Feature	FE 1611
Cut Width	11’
Capacity - Heaped	16 cu yd
Capacity - Struck	11 cu yd
HP Required	300–600
Max Cut Depth	6.75”
Max Dump Height	21”
Ground Clearance	21”
Weight	22,500 lb
Overall Height	7’
Overall Length	31’
Overall Width	11’ 10”
Pull Point to Rear Axle	26’
Tire Size	26.5 R25
Rim	10 bolt
Spindles	6” / 35,000 lb
Required Lug Nut Torque	**See page 36.**
Wheel Base	NA
Cylinder - Front Gate	4” x 28”
Cylinder - Eject	5” x 58”

Tractor Operational Considerations

Horsepower and Traction

A 300–600 HP tractor is required to manage the working loads of the scraper. Following are some different types of working loads the tractor must be able to handle: the weight of the scraper, the fully loaded scraper bowl, the hydraulic power load, heavy clay soil, dense or rocky soil, deep cuts, higher rolling resistance, climbing slopes, and others.

Additionally, adequate weight, tractor all-wheel or 4-wheel drive, or a track tractor are needed to prevent wheel spin while filling the bowl. A tractor can have ample engine horsepower but still be unable to pull the scraper if it cannot transfer that power to the ground.

Proper ballast is essential for safe operation, traction, steering control, braking performance, and drivetrain life. Follow the ballast recommendations provided in the tractor operator’s manual and ensure the tractor is properly configured for the intended application.

Hydraulics

The FE 1611 features a direct-mount design with partially enclosed hydraulics. The tractor must have a properly matched remote hydraulic system.

Preparation for Scraper Use

Preparing the Tractor

- Choose a tractor with sufficient size, weight, horsepower, brakes, and control to safely pull a fully loaded scraper even in wet or extreme conditions, and refer to the tractor manual or tractor dealer for limits.
- Tractor hydraulics must supply a minimum of 20 gal/min (76 L/min) at 2,500 psi (17,200 kPa). Ensure the tractor reservoir has enough fluid.
- Always follow all tractor instructions for operation, tires, wheel settings, weights, equipment connection, and hydraulics.
- Ensure the tractor drawbar is rated for the application and securely connected to the scraper hitch.
- Ensure the tractor three-point linkage is secured to prevent swinging and damage to tires or hydraulic hoses.
- Ensure the hitch lock is in place.
- Check that all brakes are working correctly.
- Ensure the tractor is properly ballasted for safe, controlled scraper operation; refer to the tractor manual.
- Ensure all lights, reflectors, and safety signs are installed and functioning properly.

Turning the Hydraulic Cylinder Lock Valve ON or OFF

⚠ WARNING

- Always relieve all hydraulic system pressure before disconnecting from the tractor hydraulic system, making hydraulic system adjustments, or performing hydraulic system maintenance.
- Prevent the hydraulic lock valve handle from unintentional turning.

Important
Always fully open or fully close the ball valve. The handle moves 90 degrees. Leaving the valve partially opened or partially closed can cause valve deformity or damage.

1. OPEN and turn ON the hydraulic lock valve to engage the scraper hydraulic circuit.
2. To OPEN the valve, turning the valve ON:
   Turn the valve handle counterclockwise to align with the valve body centerline.
3. CLOSE and turn OFF the hydraulic lock valve to disengage the scraper circuit and maintain cylinder position and hydraulic system equilibrium within the affected hydraulic circuit.
4. To CLOSE the valve, turning the valve OFF:
   Turn the valve handle clockwise 90 degrees from the valve body centerline into the fully closed/off position.

OPEN and turn ON the hydraulic lock valve.

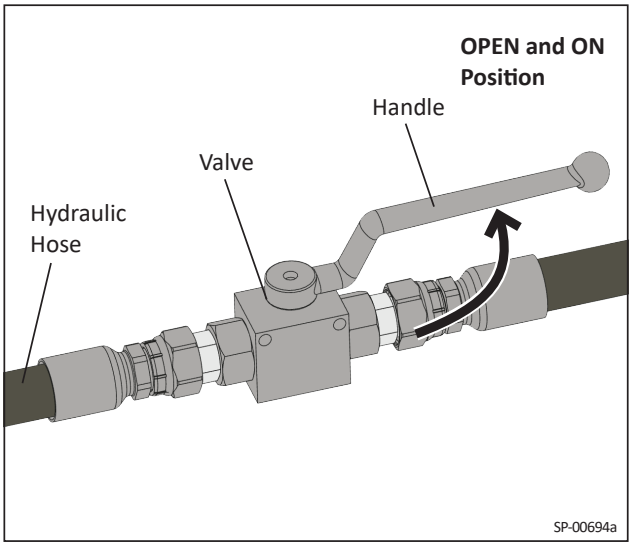

CLOSE and turn OFF the hydraulic lock valve.

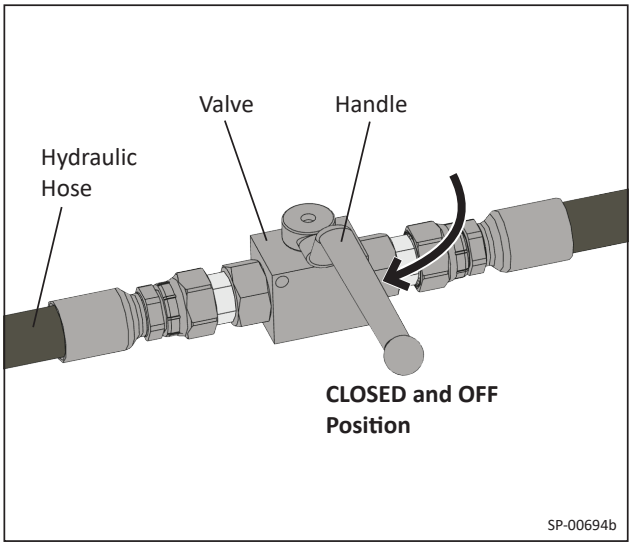

Hitching/Unhitching the Scraper

⚠ WARNING

- Ensure there is adequate lighting and that you can see clearly to make all connections and preparations.
- Relieve all hydraulic pressure, and turn off the hydraulic lock, and prevent the hydraulic lock valve handle from unintentional turning.
- When hitching and making hydraulic connections and whenever someone is in the area between the tractor and scraper, make sure both the tractor and scraper are completely immovable, and that both are on solid level ground.
- During preparation for hitching/unhitching and connecting/disconnecting hydraulics keep the assistant guiding the tractor to the scraper hitch a safe distance from the tractor and scraper whenever the tractor and scraper are not made absolutely immovable.
- **Every time before you exit the tractor, put it in park, apply the emergency brake, shut it off, remove the key, and ensure the tractor can't move. Then exit the tractor.**

Moving the Tractor Into Position, Connecting Hydraulics, and Hitching the Scraper

1. Position the tractor directly in front of the scraper and align it with the scraper hitch. When backing up the tractor reduce the throttle to the slowest idle.
2. Put the tractor in park, apply the parking brake, turn off the tractor, remove the key, and exit.
3. Connect the scraper hydraulic quick connect couplers to the tractor hydraulics.
4. Enter the tractor, turn it on, and lower the tractor drawbar into position to meet with the scraper hitch.
5. Raise the scraper tongue to meet with the tractor drawbar using the hydraulics in preparation for hitching the tractor and scraper.
6. Staying out of the area between tractor/scraper, and using hand signals, the assistant should direct the operator to slowly reverse the tractor to meet with the hitch, keeping the tractor safely in-line with the scraper.
7. Keep the tractor throttle at slowest idle.
8. Once in position for hitching, put the tractor in park, apply the parking brake, turn off the tractor, remove the key, and exit.
9. Securely hitch the tractor drawbar to the scraper hitch.

Unhitching the Scraper

1. Each time before you exit the tractor put the tractor in park, apply the parking brake, and turn off the tractor.
2. Park the scraper on firm, level ground in a safe area.
3. Place suitable 4"x4" blocks or other similar blocks under the scraper bowl and tongue.
4. Lower the front of the scraper bowl firmly onto 4"x4" blocks or other similar blocks and rest the scraper tongue firmly on a block.
5. Ensure the scraper and tractor will remain immovable.
6. Open the hydraulic lock valve, fully relieve the tractor and scraper hydraulic pressure and then disconnect the scraper hydraulic couplers from the tractor. If the scraper has a GPS or other electrical accessory, disconnect the scraper electrical connection to the tractor.
7. Unhitch the scraper from the tractor and move the tractor safely away from the scraper.

Checking the Scraper Before Operating or Transporting

⚠ WARNING

- Perform the checks in this manual section before operating or transporting.
- Before inspecting or connecting the tractor and scraper, set the tractor parking brake, shut off the tractor, remove the key, and ensure the tractor and scraper are absolutely immovable. Then check the scraper.
- Ensure the tractor drawbar, hitch, hitch pins, and safety locks are co securely in place and ready for towing.
- Make sure the scraper hydraulic hoses are properly connected to the tractor hydraulic couplers and that hoses are routed properly and can't be kinked or damaged during towing.

Verifying the Equipment is Ready Before Operation or Transport

⚠ CAUTION

Ensure lug nuts are properly torqued to prevent loss of control, injury, and/or equipment damage.

- Check for any damaged, worn, loose, or missing hardware.
- Ensure the scraper is properly lubricated as indicated in **Lubrication Guide and Schedule** on page 35.
- Check for correct tire pressure. See **Checking for Proper Tire Pressure** on page 34.
- Check the tractor hydraulic oil level; add oil if needed.

Visually Inspecting Before Operation or Transport

Before each use, visually inspect the tractor, scraper, and surrounding area in preparation for operation/transport.

- Inspect the scraper and blades; replace any damaged or worn parts.
- Ensure all pins are present, secure, and properly retained. Replace any worn, damaged, or missing pins or parts.
- Verify hydraulic cylinders, hoses, fittings and other components are positioned correctly and are leak-free.
- Confirm all shields, guards, covers, attachments, and connections are secure and functional.
- Ensure all equipment is fully ready for operation.
- Ensure all persons are clear of the equipment before starting the tractor.

Preparing the Hydraulic System for Operation

⚠ WARNING

If a hydraulic failure or leak occurs, shut down the tractor and relieve pressure immediately.

1. Inspect hoses and fittings for kinks, pinch points, interference, leaks, or abrasion. Ensure none are twisted, damaged, or worn, and that hose clamps and straps are secure. Make replacements or adjust as needed.
2. Check the tractor hydraulic oil level; add oil if needed.
3. Connect the hydraulics to the tractor hydraulic remote outlets.

Recommendation

Connect the lift cylinders hydraulic quick couplers to one tractor bank so when the control/lever for that bank is:

- pushed forward the entire blade lowers (lift cylinders retract)
- pushed back the entire blade raises (lift cylinders extend)

Connect the gate cylinders hydraulic quick couplers to one tractor bank so when the control/lever for that bank is:

- pushed forward the scraper gate lowers (gate cylinders retract)
- pushed back the scraper the gate raises (gate cylinders extend)

Connect the push-off cylinder hydraulic quick couplers to one tractor bank so when the control/lever for that bank is:

- pushed forward the scraper push-off moves forward (push-off cylinder extends)
- pushed back the scraper the push-off moves backward (push-off cylinder retracts)

4. Before moving from the hitching site, check that the control/lever for each cylinder fully expands and retracts each cylinder.
5. View the scraper while testing the hydraulics and watch for any possible hydraulic failures or leaks.

Safe Operation on Slopes and Grades

⚠ WARNING

Failure to operate safely on slopes and grades can result in loss of control, rollover, collision, serious injury, or death.

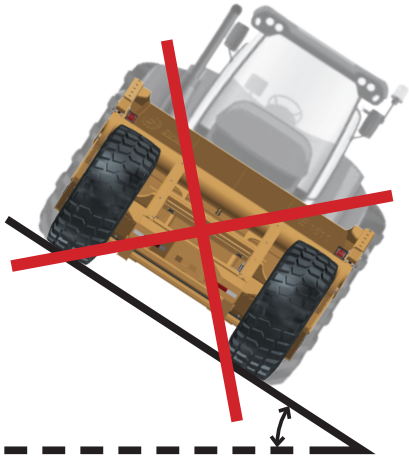

- Operate only on slopes the tractor can safely traverse. Do not exceed the tractor manufacturer's operating limits.
- Avoid operating across slopes whenever possible. When conditions permit, travel straight up or down slopes using extreme caution.
- Reduce speed before ascending or descending a slope and maintain full control of the tractor and scraper at all times.
- Avoid sudden steering, braking, acceleration, or directional changes.
- Stay clear of drop-offs, ditches, embankments, soft ground, and other hazardous terrain that could cause rollover or loss of control.
- Keep all persons away from the tractor and scraper during operation.

OP-0008

Before Operating on Slopes

- Do not operate during unsafe weather or ground conditions, including ice, snow, rain, mud, high winds, loose soil, or poor visibility.
- Verify proper tractor braking performance.
- Consider tractor size, power, traction, ballast, load, and ground conditions before operating on slopes.

Safe Operating Practices on Slopes

- Select a low gear before ascending or descending slopes.
- Never coast downhill in neutral.
- Keep the scraper load as low as practical.
- Watch for uneven terrain, excessive bouncing, and sudden impacts that could affect stability.
- Avoid turning on slopes whenever possible.

Transporting the Scraper

⚠ WARNING

- Read, understand, and follow the **Transport Safety** instructions in this manual's **Safety** section on page 11 when transporting this scraper.
- Also adhere to the **FE Scraper General Operation** instructions on page 28 when transporting the scraper.
- Prevent striking, crushing, or running over persons or obstacles. Be aware the scraper may be wider than the tractor.
- Keep children, bystanders, animals, and obstacles away from the scraper when it is parked, operating, or moving. Never allow riders on the scraper.

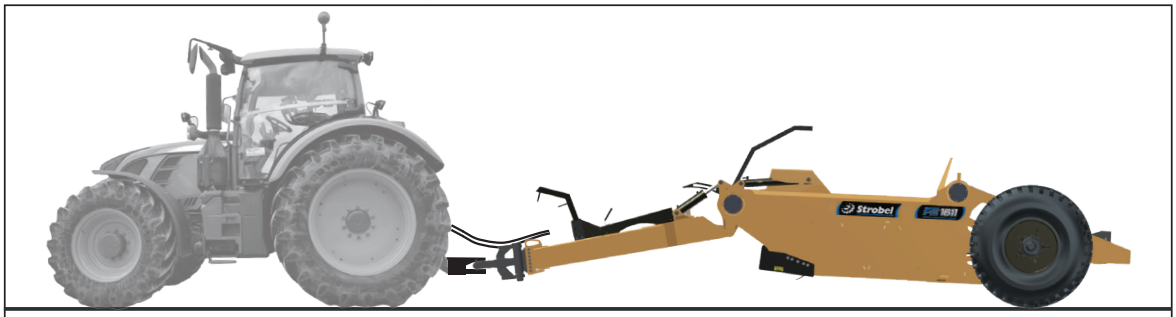

SP-00684

Before Transporting

1. Before transporting the scraper, lock/secure the hydraulic cylinder lock valve.
2. Lock the tractor brake pedals together.
3. Ensure lug nuts are properly torqued.
4. Verify SMV sign, reflectors, and lights are installed and are properly functioning.
5. Remove all debris from the scraper before transporting on roads.
6. Raise the scraper for transport, but not excessively to avoid increased rollover risk.

During Transport

⚠ WARNING

- Read and follow the **Operation Safety** section on page 17 of this manual.
- Do not exceed 25 mph (40 kph) on highways or 10 mph (16 kph) off-highway. Reduce speed and shift to a lower gear on steep slopes.
- Use hazard warning flashers when required or permitted by local regulations.
- Check mirrors often, watch rear traffic, and use turn signals
- Slow down, apply caution, allow extra turning/stopping distance, and ensure you can stop safely.

FE Scraper General Operation

⚠ WARNING

- Read and understand this entire manual, the tractor manual, and all safety instructions before operating!
- Always protect yourself and others from injury. Remain alert and aware of nearby people, vehicles, and hazards.
- Stay alert and plan ahead to avoid danger. Unexpected work situations, site/environment conditions can occur.
- Before hauling where there are other vehicles, remove any dirt, debris, and don't overfill to prevent spilling.
- Operate only on slopes the tractor can safely traverse based on size, power, traction, load, and ground conditions. Do not exceed tractor limits.

NOTICE

Use of cylinder locks on this scraper is prohibited at all times, including during operation and transport.

Use of Cylinder Locks is Prohibited

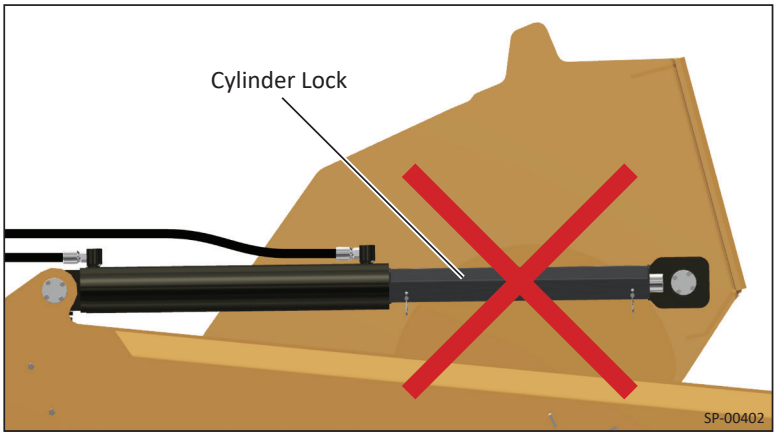

NOTICE

Do not shift to a higher gear while loading the scraper.

Important

- FE scraper operators must be properly trained and authorized.
- Follow relevant scraper and earthmoving safety instructions at all times.
- Operate the tractor and attached equipment according to manufacturer instructions.
- Always operate the implement at a safe speed.
- Consistently monitor the scraper during operation as necessary, including frequently through the rear window.
- Do not operate the scraper with the gate fully raised. Doing so may place excessive stress on scraper components and result in equipment damage.

Maintenance

Maintenance Safety

⚠ WARNING

Always follow all safety instructions.

- Before servicing, inspecting, adjusting, or lubricating the scraper, park the tractor and scraper on firm, level ground in a clean, dry, well-lit area. Shut off the tractor and remove the key.
- Ensure the scraper is fully lowered and firmly resting on the ground or securely supported with approved supports.
- Relieve all hydraulic pressure and stored hydraulic energy.
- Each time you leave the operator's seat, engage the parking brake, shut off the engine, remove the key, and ensure the tractor and scraper are secured against all movement.
- Follow the **Securing and Supporting the Scraper for Maintenance** below.
- Never enter the area beneath the scraper to avoid crushing injuries or death.
- Do not enter beneath the scraper gate unless the gate is securely cribbed, secured against movement, hydraulic pressure is relieved, the hydraulic lock valve is OFF, and the scraper wheels are chocked.
- Keep hands, feet, clothing, and all body parts away from pinch points and moving components.
- Use correct parts or equivalent. Unauthorized parts may void the warranty. Contact the factory if in doubt.

MS-0004

Securing and Supporting the Scraper for Maintenance

⚠ WARNING

- Adhere to the following instructions. Never work under this scraper. Only work on this scraper when it's securely positioned, blocked, supported, and there's no possible way it could shift, move, or drop down.
- Properly block and support the scraper before performing maintenance. Ensure the tractor, scraper, and all components are secured against movement and cannot shift, fall, pinch, or otherwise cause injury or death.
- Always use correct, stable jacks properly rated to support the weight.
- Lift only at approved support points with adequate equipment. Contact Strobel Manufacturing if unsure of proper lifting points.
- Always support the scraper on a solid, level concrete pad that can safely support the weight away from people, equipment and high winds.

1. Move the tractor and scraper onto a firm, level surface suitable for safely jacking and supporting the equipment.
2. Turn the hydraulic lock valve on the scraper to the locked position, and relieve the tractor hydraulics.
3. Put the tractor in park, set the parking brake, shut off, remove the key, and exit, chock rear tractor tires both ways, and ensure the tractor and scraper can't move.
4. Place 10-ton rated jacks at approved support points. Raise the scraper and install support stands.

Jacking and Supporting the Scraper for Changing a Tire

⚠ WARNING

- Every time before you exit the tractor, put it in park, apply the emergency brake, shut it off, remove the key, and ensure the tractor can't move. Then exit the tractor.
- Ensure the scraper rests securely on the supports before changing the tire and the scraper cannot shift or fall.
- Ensure no one is between the tractor and scraper when the tractor is running or someone is positioned at the tractor controls.

1. Relieve all tractor hydraulic pressure.
2. Put the tractor in park, set the parking brake, shut off, remove the key, and exit, chock rear tractor tires both ways (See the illustration on the next page.), and ensure the tractor and scraper can't move.
3. Place a 20,000 lb min. jack (max 10-1/2" in lowered position) under frame location A (see below).
4. Place a 20,000 lb min.-capacity jack supt. stand (extending to min. 28" tall) under frame location B (see below).
5. Raise the side of the scraper requiring tire service until the tire clears the ground.
6. Raise the jack support to support to secure the scraper.
7. Slightly lower the jack so the scraper firmly rests on the jack support and is stable.
8. Change the tire. Refer to **Installing a Wheel and Applying Correct Lug Nut Torque** on page 36.

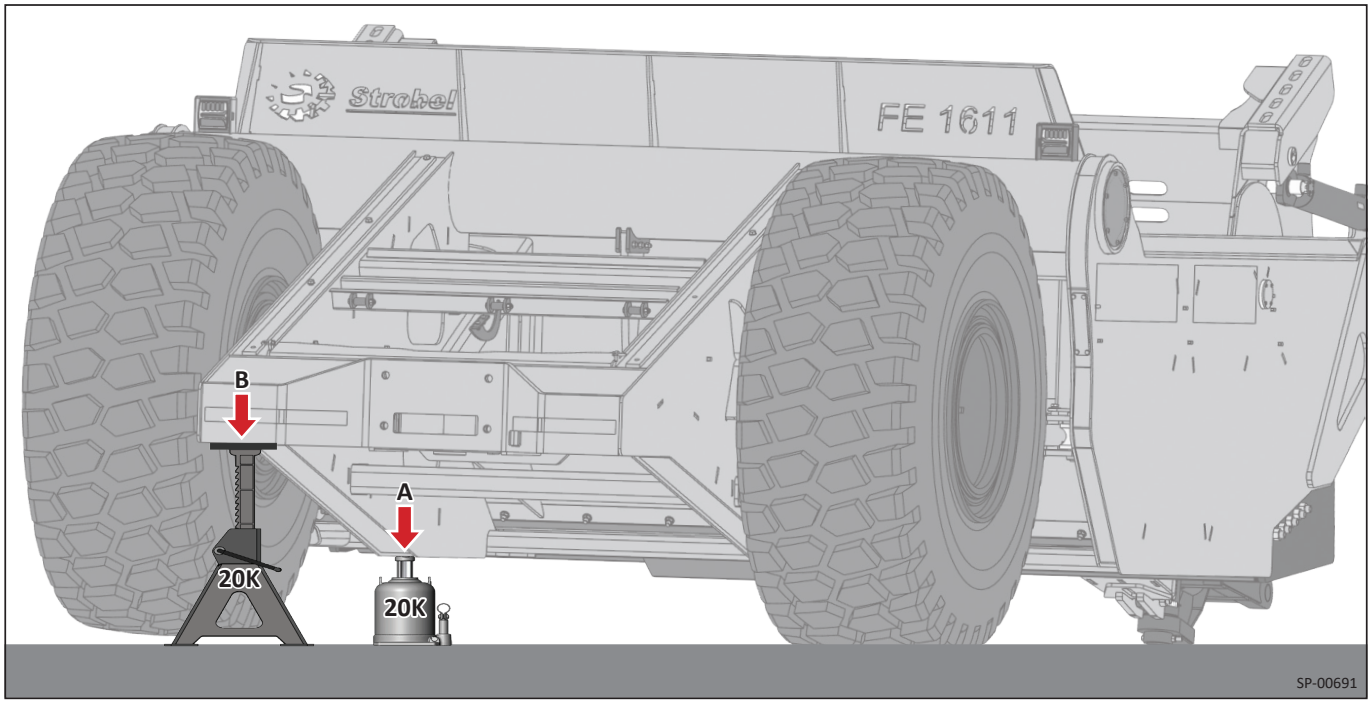

Securing and Supporting the Scraper to Replace the Blades

⚠ WARNING

- Enter the area under the gate only when cylinder locks are installed and the gate is secured against falling.
- Ensure no one is between the tractor and scraper when the tractor is running or someone is at the tractor operator's station.
- Every time before you exit the tractor, put it in park, apply the parking brake, shut it off, remove the key, and ensure the tractor can't move. Then exit the tractor.

Important

The following gate support method is provided as a suggested example only. The owner and all persons performing work on the scraper are solely responsible for ensuring the scraper gate is adequately and safely supported before any work is performed.

1. Move the scraper and tractor onto a solid, level, concrete pad.
2. Raise the gate more than 22" high in preparation for installing cribbing under the gate.
3. Raise the bowl about 16", put the tractor in park, apply the parking brake, turn it off, remove key, and exit the tractor.
4. Chock the tractor wheels with properly sized chocks suitable for the tractor and surface the tractor is parked on.
5. Place two 6" x 6" x 12" solid, adequate blocks (capable of supporting the scraper) under each scraper side just behind the side blades to support the bowl 12" above the pad. (Use No. 1 Southern Yellow Pine or Stronger.)
6. Turn on the tractor and lower the scraper so it fully rests on the 6" x 6" x 12" blocks, is stable, and securely supported.

Supporting the Bowl for Blade Replacement

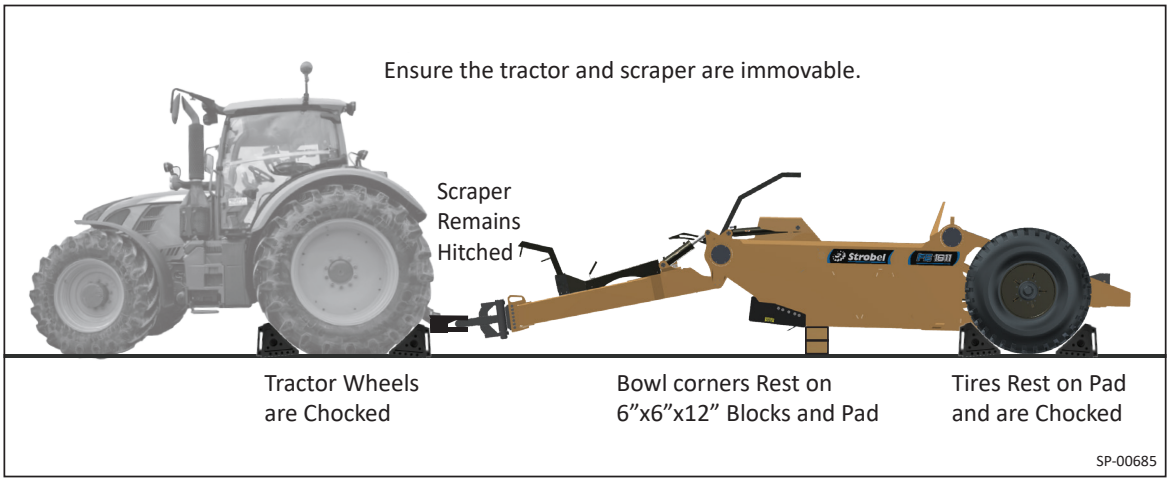

7. Ensure the gate is raised higher than 22”. Then, shut off, remove the key, and exit the tractor.
8. Prepare 6 × 6 × 36 in. cribbing, 22” tall, and place it in the center of the gate. Use No. 1 Southern Yellow Pine or Stronger. Keep hands and body parts clear while positioning cribbing.

   Important
   It is important the gate rest at about 22” off the ground so that the gate will be balanced on the cribbing.
9. Start the tractor and safely lower the gate onto 6” × 6” × 36”. cribbing positioned 1” in front of the bowl’s front blade, centered beneath the gate, with the gate resting approximately 22” above the work surface.

Supporting the Gate for Blade Replacement

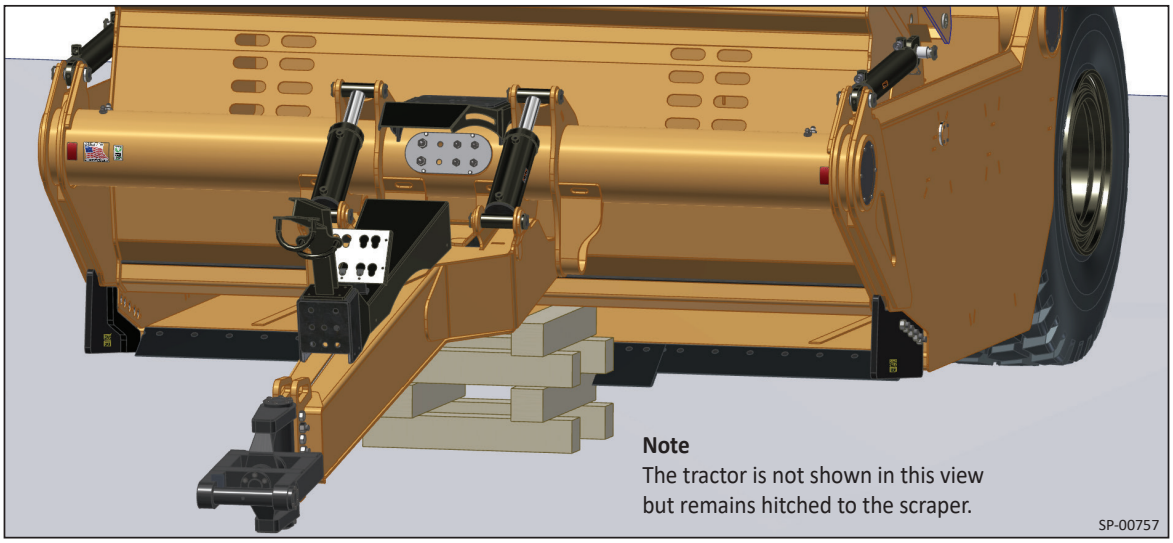

10. Shut the tractor off, remove the key, and exit the tractor.
11. Verify the scraper is resting on the blocks and that there is no way the scraper, gate, cribbing, blocking, or any component can shift, fall, or move unexpectedly. Safely make any adjustments if needed before proceeding.
12. Enter the tractor and relieve tractor hydraulic pressure; shut off, remove the key, and exit the tractor.
13. Fully close the hydraulic lock valve on the scraper.

    Important
    - Ensure the blocks, tires, and scraper rest firmly on the concrete and are immovable.
    - Ensure there’s no possible way for the scraper or tractor to shift, move, or drop down.
14. The tractor and scraper are now ready for blades to be changed. See **Replacing the Blades** page 38.

Bolt Torque

Bolt Grade Designation

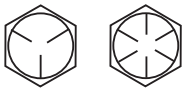

Grade 5 Grade 8

Bolt Diameter	SAE Grade 5		SAE Grade 8	
	ft-lb	Nm	ft-lb	Nm
3/8”	35	47	50	68
7/16”	55	75	80	108
1/2”	85	115	120	163
9/16”	130	176	175	237
5/8”	170	230	240	325
3/4”	300	407	425	576
7/8”	445	603	685	929
1”	670	908	1030	1396
1-1/8”	910	1234	1460	1979
1-1/4”	1250	1695	2060	2793

Storing the Implement

Store the scraper a safe distance away from people and animals. Store it indoors to prevent rust.

Perform the items on this checklist before storing the implement:

1. Clean the scraper removing all dirt and material to prevent rusting.
2. Check the scraper for any loose, damaged, worn, or missing parts; make repairs and replacements as required.
3. Apply paint to any exposed metal to prevent rusting.
4. Apply grease or rust preventer to all earth moving surfaces that make contact with the material.
5. Set the scraper on blocks to prevent damage to blades and to prevent tires from developing flat spots corrosion and tire damage.
6. Replace all safety lights, decals, signs, or reflectors that are not in good condition or are no longer easily visible.

Maintenance Schedule

Maintenance Task	Task Frequency
Check for any missing safety decals or signs.	Before each use
Clean the scraper and protect exposed surfaces.	After each use
Check for and make any needed repairs, part replacements, or hose replacements.	Before each use
Lubricate the scraper	Follow the Lubrication Guide and Schedule
Check tires/wheels inflate tires if needed.	Daily
Repaint any exposed metal.	Whenever you notice scratches, chips, or rust
Check pin bolts at all pivot locations.	Whenever there is any visible slack around pins
Grease all grease points.	After every 8 hours of use
Check wheel lug nuts for proper torque.	After every 50 hours of use

Checking for Proper Tire Pressure

1. Check tire pressure regularly (weekly is recommended).
2. Inflate tires to the pressure specified by the tire manufacturer.
3. Measure pressure when tires are cold for accuracy.
4. Do not exceed the maximum tire sidewall PSI.

   Note
   - Keep tires vertical having no sidewall sag while rolling.
   - If tires lose over 2 PSI (14 kPa) per month, look for damage and check with a tire dealer.
   - Inspect tires regularly for cuts, cracks, punctures, abnormal wear, and other signs of damage.

5. Use valve caps to keep valve cores clear of debris and to help guard against air leakage.

Lubrication Guide and Schedule

Lubricate all grease fittings using an SAE multi-purpose grease uncontaminated and suitable for your conditions.

FE Scraper Lubrication Points

Lube Points	Description	Locations	Qty	Frequency
A	Roller Assy Zerks	2 Right, 2 Left	Grease each as required	Once every 10 hr
B	Gate Cylinder End Zerks	2 Right, 2 Left	Grease each as required	Once every 10 hr
C	Hitch Grease Zerks	1 Upper End	1 Shot	As needed

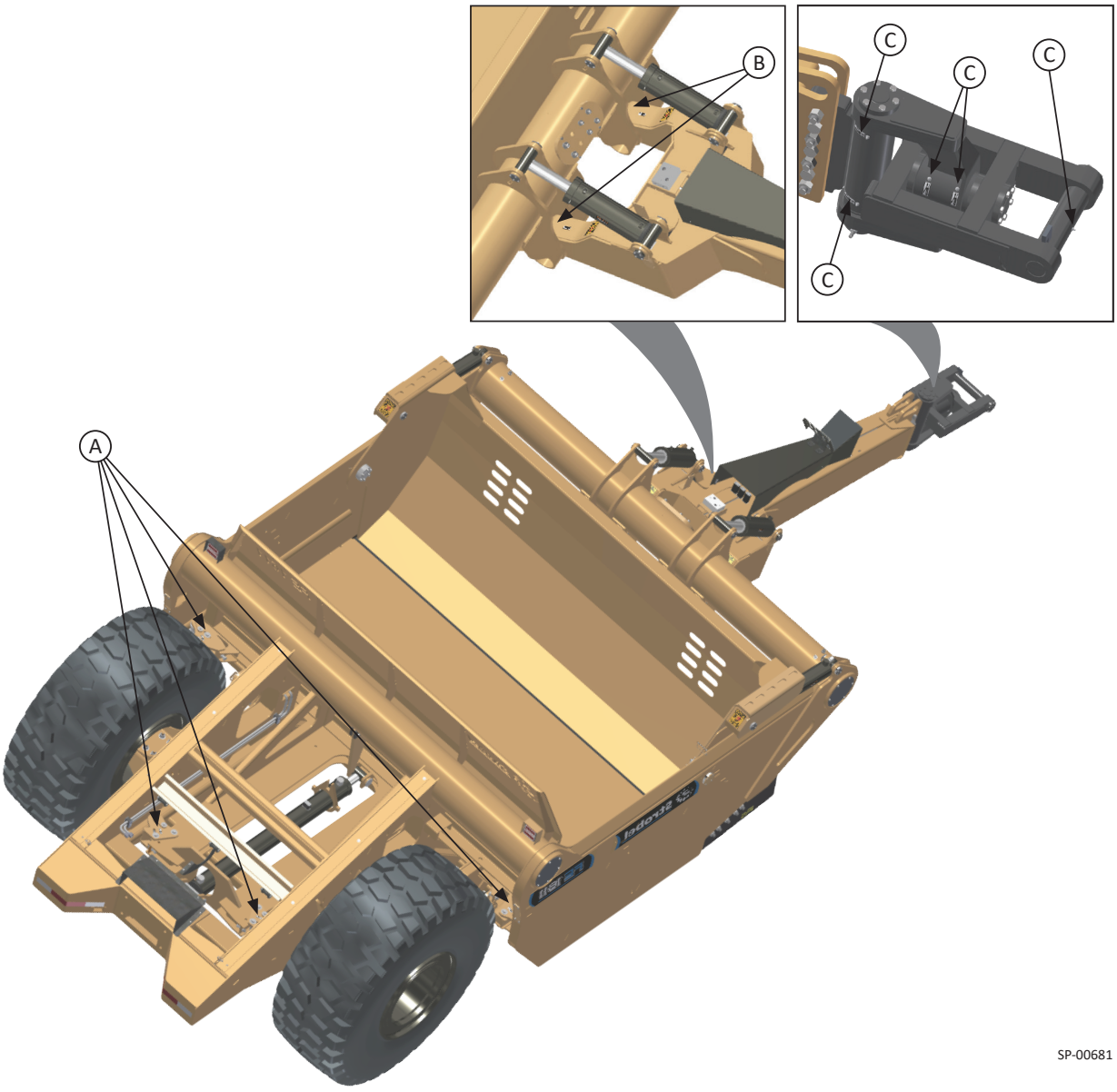

SP-00681

Replacing a Wheel

Removing a Wheel

Important
Adhere to the instructions on pages 29–30 for securely supporting the scraper to remove a wheel.

1. Loosen slightly, but do not remove the lug nuts on the wheel being changed.
2. Raise the scraper and properly support the scraper per the **Securing and Supporting the Scraper for Maintenance** instructions on page 29–30.
3. Remove the scraper wheel assembly. Handle the tire safely without lifting the tire.

Installing a Wheel and Applying Correct Lug Nut Torque

1. Check the parts list and ensure all parts are present. Contact Strobel Manufacturing if any parts are missing.
2. After removing the wheel, according to the above procedure, begin new wheel installation.
3. Reuse the original implement lug nuts or obtain equivalent replacements. Replace any lug nut or wheel stud that is damaged or has damaged threads.
4. Clean the wheel and rim of dirt, debris, and grease with an appropriate cleaner.
5. Lift the tire using only safe lifting methods.
6. Align the wheel with the studs and place it on the hub, and install lug nuts onto two of the studs first.
7. Start all lug nuts by hand to prevent cross-threading.
8. Tighten the lug nuts in the sequence shown below and torque each lug nut to the specified torque value using a calibrated torque wrench.

10 Bolt Wheel Lug Nut Tightening Pattern

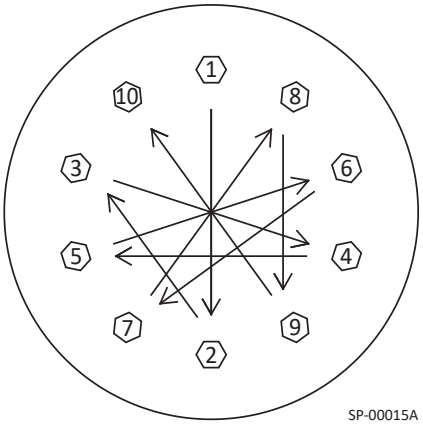

SP-00015A

Lug Nut Required Torque Values

	Lug Nut Torque Value	
	Fully Dry	Fully Dry
Lug Nut Size	ft-lb	Nm
7/8”-14	350–400	475–542

Important

Retorque the wheels every 50 hours of scraper operation.

Replacements and Parts

Replacement and Parts Safety

⚠ WARNING

Always follow all safety instructions.

- Before servicing, inspecting, adjusting, or lubricating the scraper, park the tractor and scraper on firm, level ground in a clean, dry, well-lit area. Shut off the tractor and remove the key.
- Ensure the scraper is fully lowered and firmly resting on the ground or securely supported with approved supports.
- Relieve all hydraulic pressure and stored hydraulic energy.
- Each time you leave the operator's seat, engage the parking brake, shut off the engine, remove the key, and ensure the tractor and scraper are secured against all movement.
- Follow the **Securing and Supporting the Scraper for Maintenance** instructions on page 29.
- Never enter the area beneath the scraper to avoid crushing injuries or death.
- Do not enter beneath the scraper gate unless the gate is securely cribbed, secured against movement, hydraulic pressure is relieved, the hydraulic lock valve is OFF, and the scraper wheels are chocked.
- Keep hands, feet, clothing, and all body parts away from pinch points and moving components.
- Use correct parts or equivalent. Unauthorized parts may void the warranty. Contact the factory if in doubt.

MS-0004

Replacing the Blades

Important
Inspect blades before each use and replace worn or damaged ones immediately to prevent scraper damage.

Removing the Blades and Installing New Blades

⚠ WARNING

- Never enter beneath the scraper.
- Enter the area under the gate only when the gate securely rests on proper cribbing.
- Adhere to the instructions on page 29 and 31 for safely securing and supporting the scraper for blade replacement.
- Ensure scraper hydraulic pressure is fully relieved and that scraper hydraulic hoses are disconnected from the tractor before changing the blades.

Removing the Blades

1. Prepare the tractor for removing the blades.
2. Slightly loosen, but don't remove the blade end bolts.
3. Remove all other blade bolts and nuts.
4. Safely remove end bolts and nuts and carefully lower the blade to the ground.

Installing New Blades

1. Carefully lift the new blade into position.
2. Install but don't tighten blade end bolts and nuts so the blade is secure and can't shift or drop down.
3. Loosely install the remaining blade bolts and nuts.
4. After all blade bolts and nuts are installed, tighten the bolts to proper torque.

NOTICE

Ensure all persons, tools, equipment, blocks, and other objects are clear of the scraper before reconnecting the hydraulic hoses to the tractor.

FE 1611 Blade Replacement

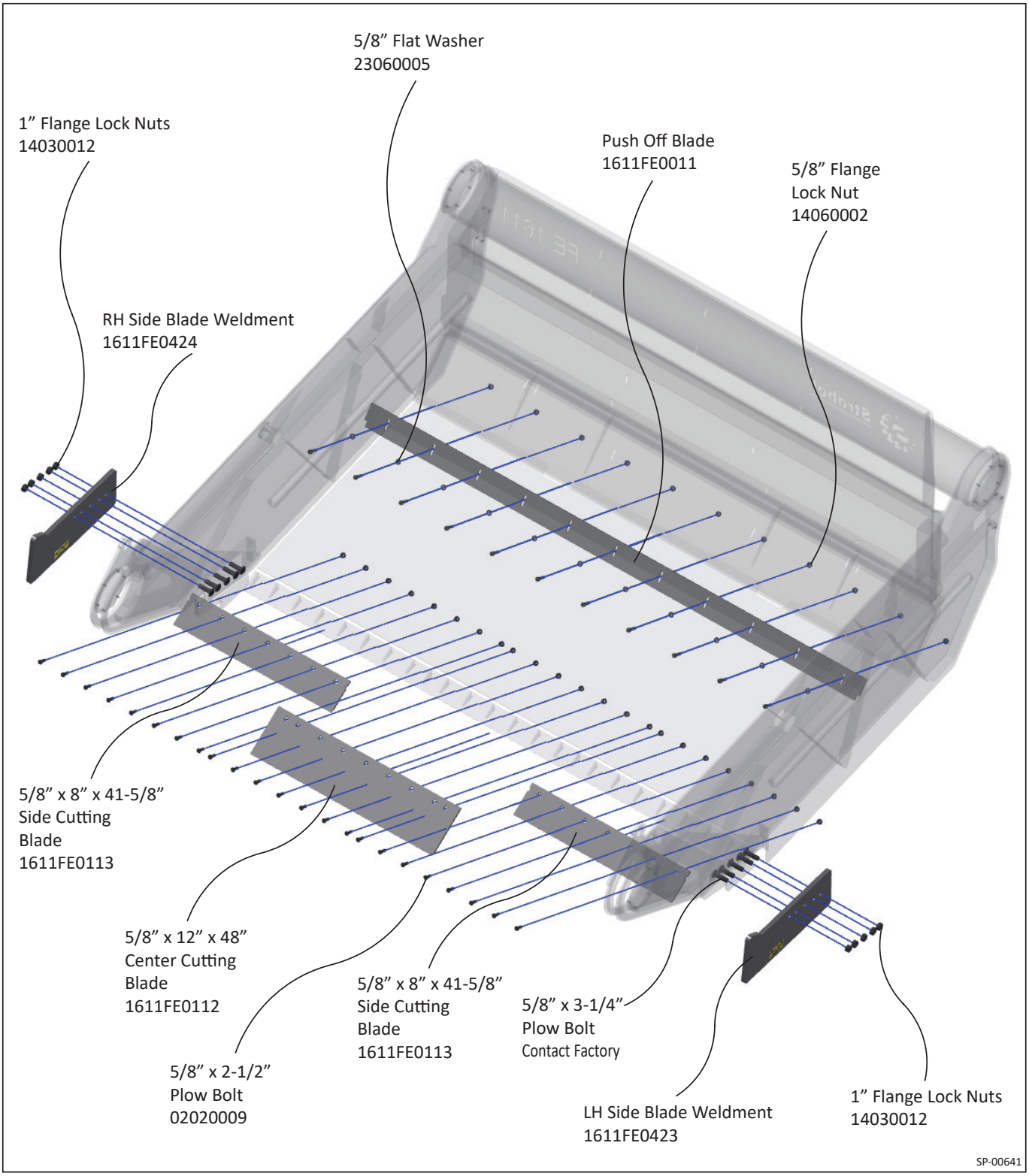

FE 1611 Tire and Wheel Assemblies

⚠ WARNING

- Only trained personnel with proper equipment should service tires and wheels.
- Tire and wheel work is hazardous; use correct tools and follow established tire service procedures.
- Do not mount, demount, or inflate tires without proper equipment and experience.
- Heat can cause explosive tire and rim failure or weaken tire, wheel, or rim components. Never weld, cut, or heat an inflated tire. Do not cut, weld, heat, braze, or straighten damaged tires, wheels, wheel components, or components adjacent to these components.

Important

- Ensure replacement tires and wheels match the original size, load rating, and type. Contact Strobel Manufacturing if unsure.
- Inflate tires only in an approved safety cage using a clip-on air chuck and long air hose. Stand clear of the tire and rim trajectory zone during inflation.
- Replace any cracked, bent, excessively corroded, or otherwise damaged tire, wheel, rim, or component.

ID	Part Number	Qty	Description
1	01230109	2	1611 Rear Wheel and Tire Assembly
2			1611 26.5 R25 Tire
3			Strobel Wheel Corresponding with a 1611 26.5 R25 Tire, PN 23000022

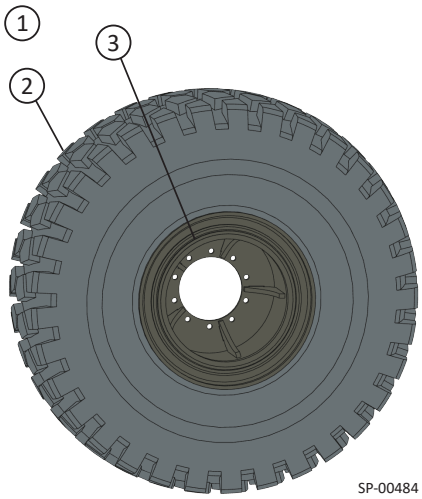

SP-00484

Lug Nut Required Torque Values

	Lug Nut Torque Value	
	Fully Dry	Fully Dry
Lug Nut Size	ft-lb	Nm
7/8”-14	350–400	475–542

Important

Retorque the wheels every 50 hours of grass scraper operation.

Spindle and Hub Assembly (2 per FE Scraper)

ID	Part Number	Qty	Description
1	03081007	4	5/16” x 5/8” Dust Cap Retainer Bolt
2	Contact Factory	1	Dust Cap
3	Contact Factory	1	Outer Grease Seal
4	Contact Factory	1	Roll Pin
5	Contact Factory	1	Castle Nut
6	Contact Factory	1	Washer
7	Contact Factory	1	Outer Bearing
8	Contact Factory	1	Outer Bearing Cup
9	Contact Factory	10	7/8” Lug Nut
10	1611FE0111	1	10-Bolt Hub, 25,000 lb
11	Contact Factory	1	Inner Bearing Cup
12	Contact Factory	1	Inner Bearing
13	Contact Factory	1	Inner Bearing Grease Seal
14	1611FE0110	1	Spindle
15	14120046	8	1”-8 High Strength Steel Nylon Lock Nut
16	23060008	8	1” Washers
17	1611FE0413	1	Top Spindle Receiver Base Plate
18	1611FE0043	1	Bottom Spindle Receiver Base Plate
19	1611FE0416	4	1” x 1-1/2” Flat Spindle Saddle
20	Contact Factory	8	1”-8 x 4-1/2” Hex Bolt
21	1611FE0417	1	Spindle U-Bolt

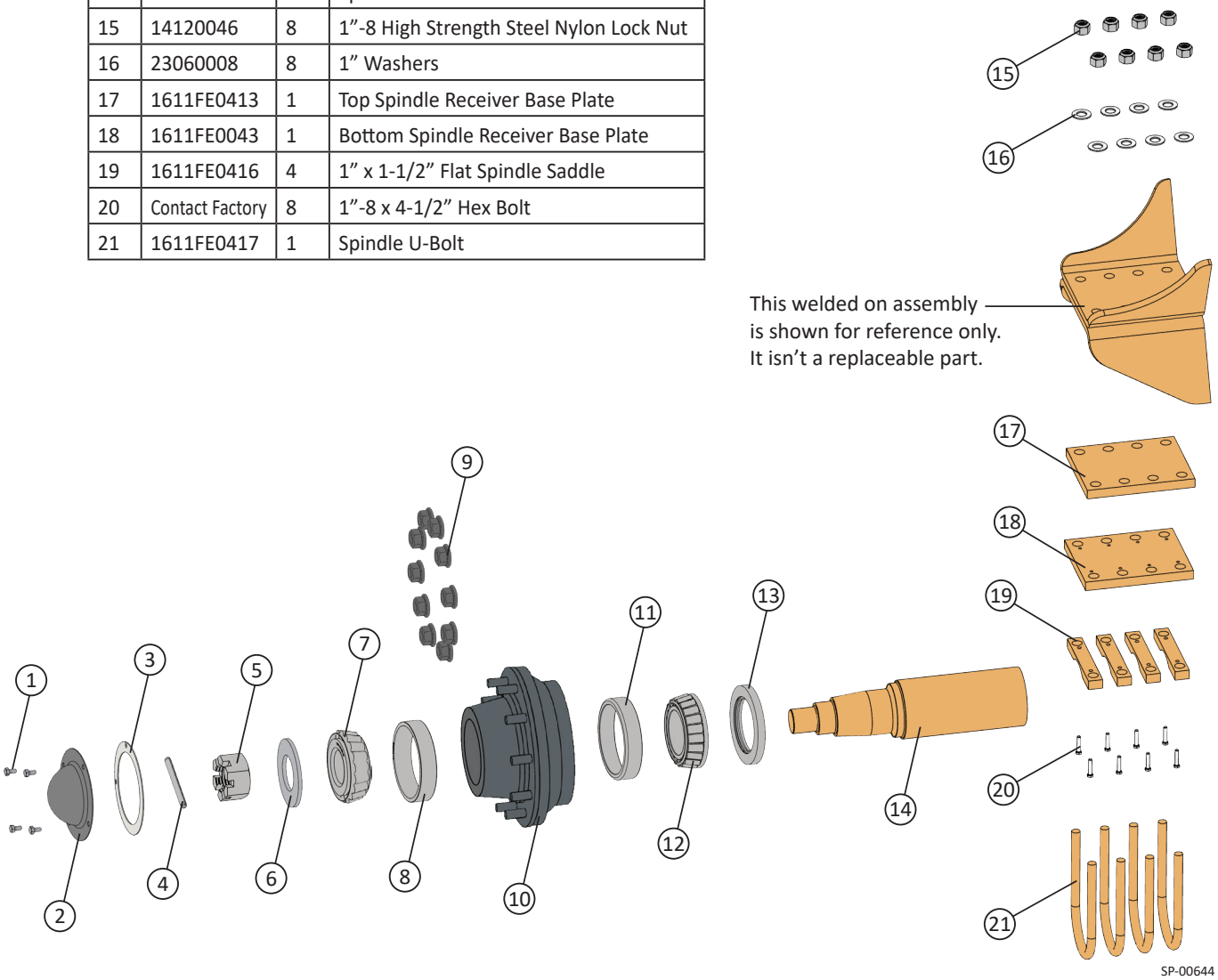

FE 1611 Scraper Caps, Pivot Pins, Bolts, and Washers

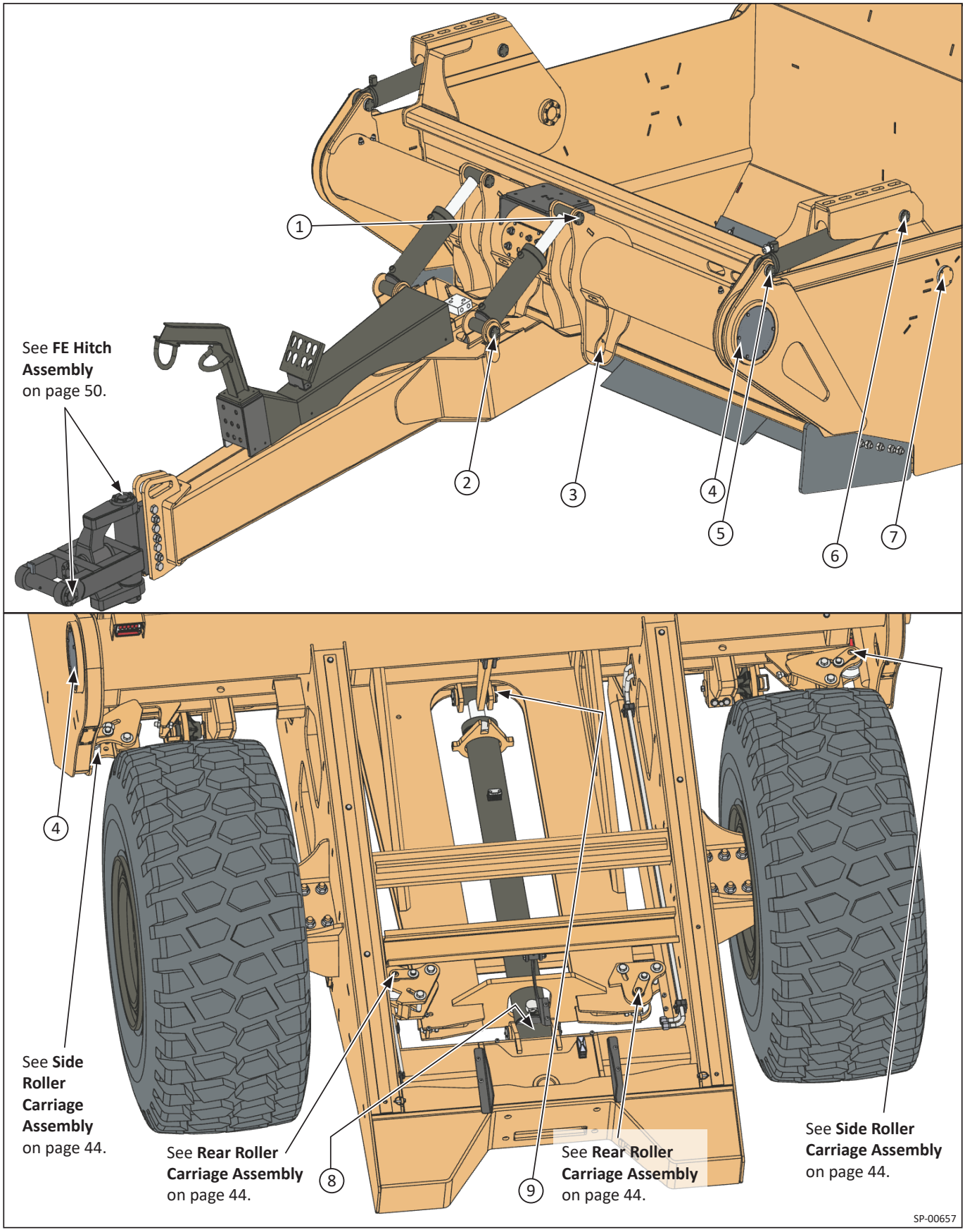

(2) 1-1/2” Pin
Retainer Cap, 2 Qty
1611FE0176



1-1/2” x 8-7/8”
Front Lift Cylinder Pin
1611FE0407

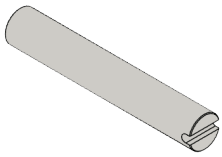

3/8” x 1-15/16” Retainer Pin
1611FE0177



1/4” x 3/4” Hex Bolt, 8 Qty
02080095



(3) 1-1/2” Pin
Retainer Cap, 2 Qty
1611FE0176



1-1/2” x 8-1/2”
Front Lift Cylinder Pin
1611FE0406

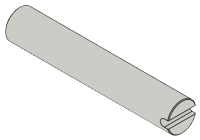

3/8” x 1-15/16” Retainer Pin
1611FE0177



1/4” x 3/4” Hex Bolt, 8 Qty
02080095



(4) Tube Access Plate
1611FE0401

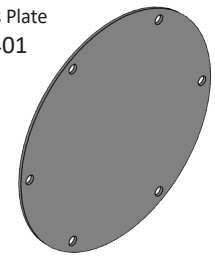

3/8” x 1” Hex Bolt, 6 Qty
02080023



3/8” Flat Washer, 6 Qty
23060002



3/8” Lock Washer, 6 Qty
23120002

(5) Front Pivot Pin
Retainer Cap, 2 Qty
1611FE0161

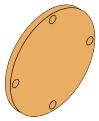

3” x 8-1/2”
FE1611 Front Pivot Pin
1611FE0404

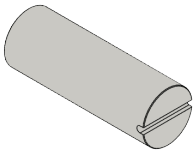

3/8” x 3-7/8” Retainer Pin
1611FE0405



1/4” x 3/4” Hex Bolt, 8 Qty
02080095



(6) 1-1-1/2” Pin
Retainer Cap, 2 Qty
1611FE0176



1-1/2” x 5-5/8”
Front Gate Cylinder Pin
1611FE0182

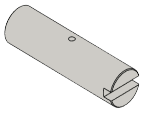

3/8” x 1-15/16” Retainer Pin
1611FE0177



1/4” x 3/4” Hex Bolt, 8 Qty
02080095



(7) 1-1-1/2” Pin
Retainer Cap, 2 Qty
1611FE0176



1-1/2” x 6”
Rear Gate Cylinder Pin
1611FE0181

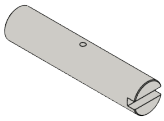

3/8” x 1-15/16” Retainer Pin
1611FE0177



1/4” x 3/4” Hex Bolt, 8 Qty
02080095



(8) 2” Pin Retainer
Cap, 2 Qty
1611FE0179

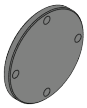

2” x 8-1/2”
Rear Push Off Cylinder Pin
1611FE0183

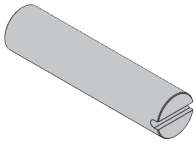

3/8” x 2-7/16” Retainer Pin
1611FE0403



1/4” x 3/4” Hex Bolt, 8 Qty
02080095



(9) 2” Pin Retainer
Cap, 2 Qty
1611FE0179

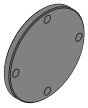

2” x 6-1/2”
Front Push Off Cylinder Pin
1611FE0184

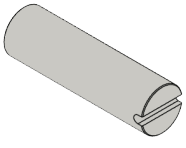

3/8” x 2-7/16” Retainer Pin
1611FE0403



1/4” x 3/4” Hex Bolt, 8 Qty
02080095



Roller Carriage Assemblies

Side Roller Carriage Assembly
(A: 01180012, B: 01180013)

ID	Part Number	Qty	Description
1	02080041	1	1/2” x 1” Grade 5 Hex Bolt
2	23120004	1	1/2” Lock Washer
3	23060004	1	1/2” Flat Washer
4	23160030	1	Roller Wheel Pin Weldment
5	02080148	2	3/4” x 7” Grade 5 Hex Bolt
6	23060016	2	3/4” Grade 8 Flat Washer
7	23030020	1	FE1611 Roller Carriage Weldment 1
8	23030021	1	FE1611 Roller Carriage Weldment 2
9	02191046	2	2” x 1” ID Step Bushing x 1.5
10	18060102	1	4” FE Pushoff Gate Roller
11	14030033	2	3/4” Crown Lock Nut

Rear Roller Carriage Assembly
(A: 01180006, B: 01180007)

ID	Part Number	Qty	Description
1	02080041	1	1/2” x 1” Grade 5 Hex Bolt
2	02080148	2	3/4” x 7” Grade 5 Hex Bolt
3	23120004	1	1/2” Lock Washer
4	23060004	1	1/2” Flat Washer
5	23160030	1	Roller Wheel Pin Weldment
6	23060016	2	3/4” Grade 8 Flat Washer
7	02191046	2	2” x 1” ID Step Bushing x 1.5
8	18060102	1	4” FE Pushoff Gate Roller
9	23030022	1	FE1611 Rear Carr. Roller Weldment 1
10	23030023	1	FE1611 Rear Carr. Roller Weldment 2

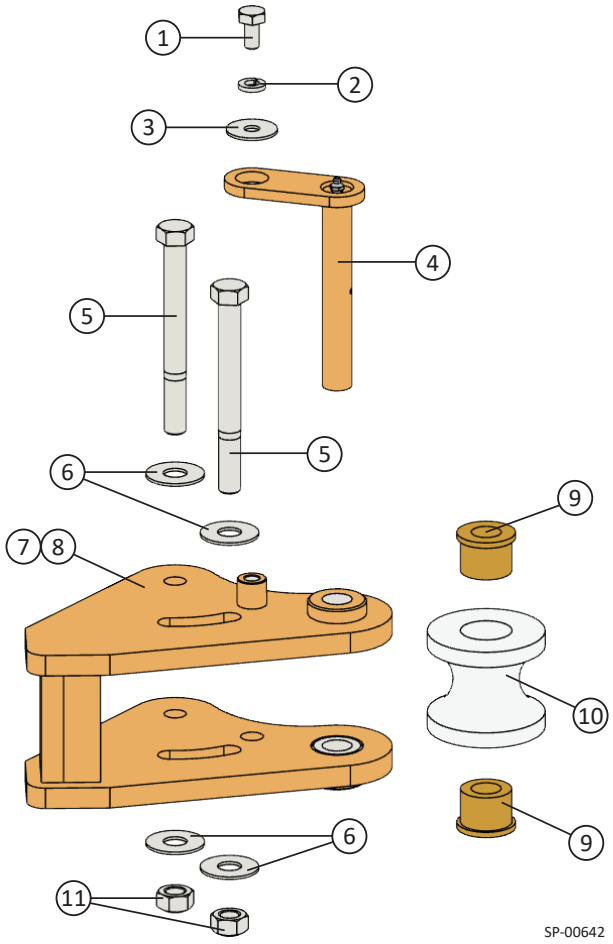

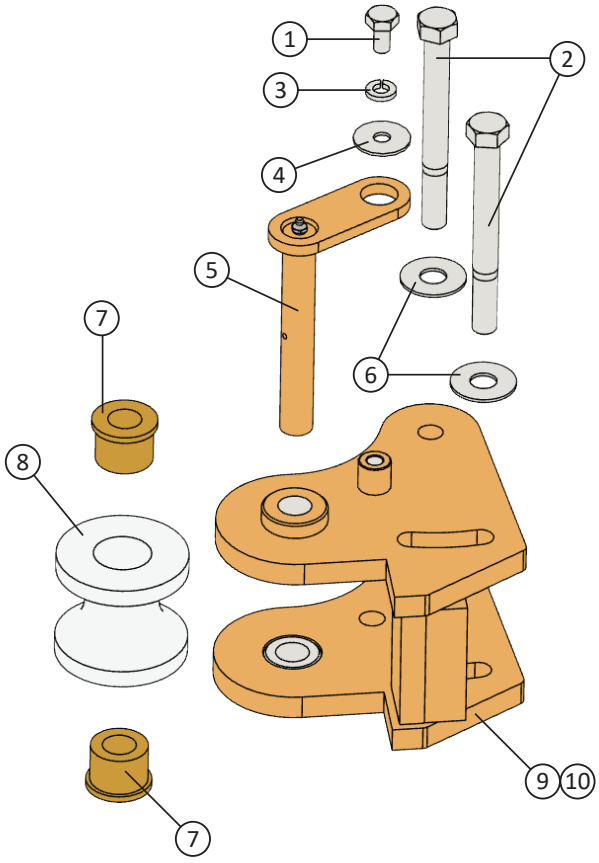

Blades, Blade Bolts, and Hydraulic Cylinders

Blades

ID	Part Number	Qty	Description
1	1611FE0011	1	1/2” x 5-7/16” x 129” Push Off Blade
2	1611FE0112	1	5/8” x 12” x 48” Center Cutting Blade
3	1611FE0113	2	5/8” x 8” x 41-1/8” Side Cutting Blade
4	1611FE0422	1	Right Side Blade
5	1611FE0421	1	Left Side Blade

Hydraulic Cylinders

ID	Part Number	Qty	Description
8	1611FE0577	2	4” x 25-1/8” Gate Cylinder
9	1611FE0578	2	5” x 11-1/8” Lift Cylinder
10	1611FE0579	1	5” x 56-1/2” Push Off Cylinder

Blade Bolts and Nuts

ID	Part Number	Qty	Description
6	02080057	11	5/8” x 2-1/2” Grade 5 Hex Bolt
7	23060005	11	5/8” Flat Washer
8	14060002	34	5/8” Flange Lock Nut
9	02020004	23	5/8” x 2” Plow Bolts
10	Contact Factory	10	1” x 3-1/4” Round Head Plow Bolt
11	14080008	10	1” Hex Nut

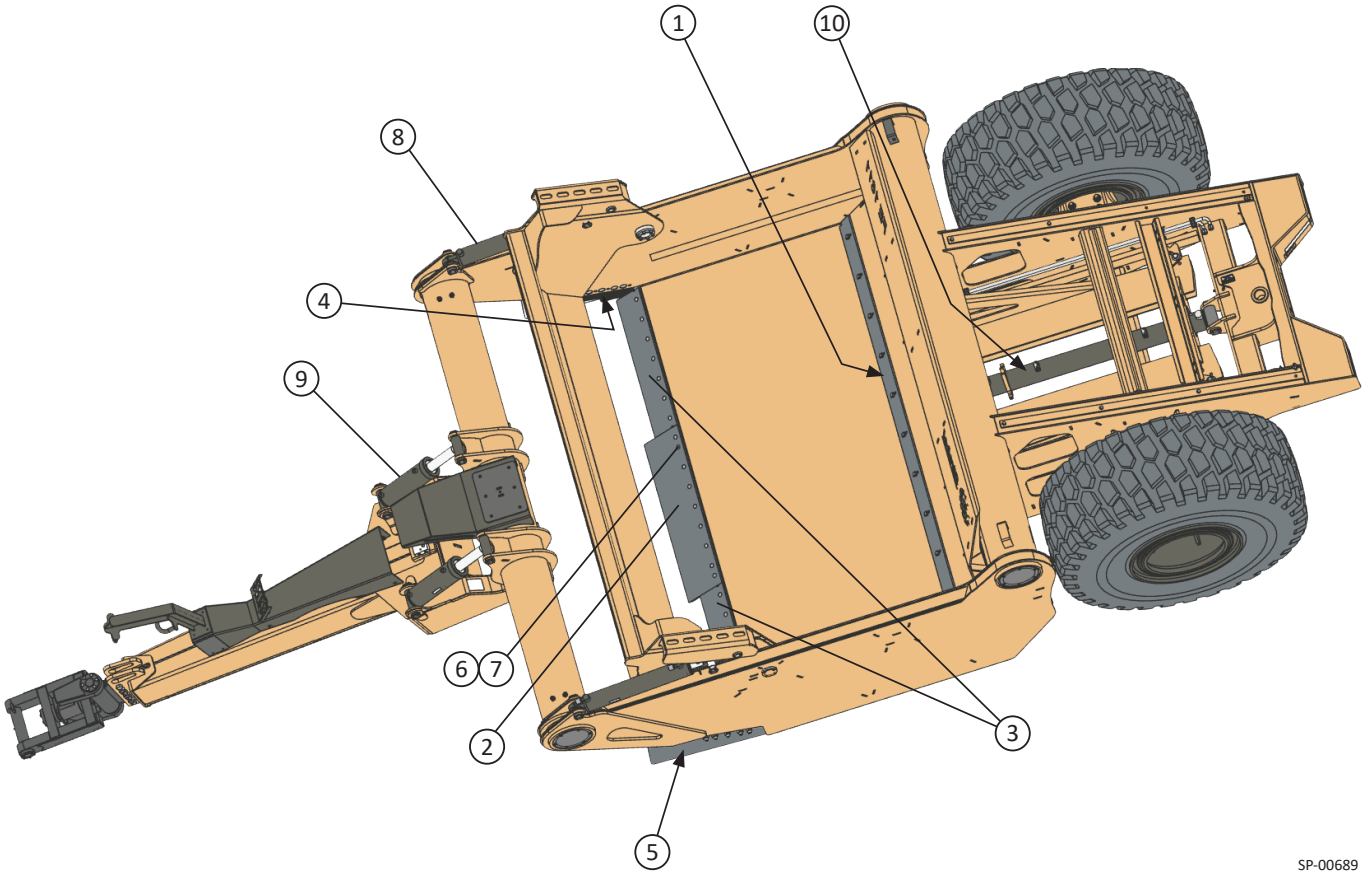

SP-00689

Standard FE Scrapers, Frontal Hydraulic System Fittings and Hoses

ID	Part Number	Qty	Description
1	Contact Factory	4	-10 Quick Conn Coupler, 7/8 O-Ring Male
2	Contact Factory	2	-12 Quick Conn Coupler, 1 1/16-12 O-Ring Male
3	08180005O	2	-10 (7/8-14) Hydraulic Handle Extend
4	08180005I	2	-10 (7/8-14) Hydraulic Handle Retract
5	08180006O	1	-12 (1 1/16-12) Hydraulic Handle Extend
6	08180006I	1	-12 (1 1/16-12) Hydraulic Handle Retract
7	Contact Factory	4	5/8" ID Tongue Hyd Hose, 7/8-14 JIC Male, 7/8-14 JIC Female
8	Contact Factory	2	3/4" ID Tongue Hyd Hose, 1 1/16-12 JIC Male, 1 1/16-12 JIC Female
9	Contact Factory	10	Adapter, 7/8-14 JIC Male to 7/8-14 JIC Male with Jam Nut
10	Contact Factory	6	Adapter, 1 1/16-12 NPT Male to 1 1/16-12 JIC Male with Jam Nut
11	Contact Factory	1	Long 5/8" ID Hyd Hose to Manifold, 7/8-14 JIC Female, 7/8-14 JIC Female
12	Contact Factory	1	5/8" ID Hose to Hyd Lock Valve, 7/8-14 JIC Female, 7/8-14 JIC Female
13	Contact Factory	2	5/8" ID Intermediate Hyd Hose, 7/8-14 JIC Female, 7/8-14 JIC Female
14	Contact Factory	2	3/4" ID Intermediate Hyd Hose, 1 1/16-12 JIC Female, 1 1/16-12 JIC Female

ID	Part Number	Qty	Description
15	06080078	11	Adapter, 7/8-14 O-ring Male, 7/8-14 JIC Male
16	22080004	1	7/8-14 Hydraulic Lock Valve
17	Contact Factory	1	Short 5/8" ID Hyd Hose to Manifold, 7/8-14 JIC Female, 7/8-14 JIC Female
18	Contact Factory	2	5/8" ID Lift Cyl Hyd Hose, 7/8-14 JIC Female Elbow, 7/8-14 JIC Female Elbow
19	1611FE0577	2	FE1611 Lift Cylinder
20	Contact Factory	2	5/8" ID Lift Cyl Hyd Hose, 7/8-14 JIC Female Elbow, 7/8-14 JIC Male
21	06020020	1	7/8-14 Bulkhead, -10 JIC Male, -10 JIC Male
22	Contact Factory	2	Adapter, 7/8-14 SAE O-ring Boss, -10 JIC Female (6402)
23	No 6400-L ref Strobel PN	1	Long Adapter, 7/8-14 SAE O-ring Boss, -10 JIC Male
24	1611FE0518	1	Standard FE1611 6 Port Hydraulic Manifold
25	06080114	2	90° Elbow, 7/8-14 SAE O-ring Boss, -10 JIC Female
26	06080067	1	7/8-14 Conn, -10 JIC Male, -10 JIC Male
27	Contact Factory	4	-10 JIC Female Cap

* -12 Hydraulic line components are shaded in gray.

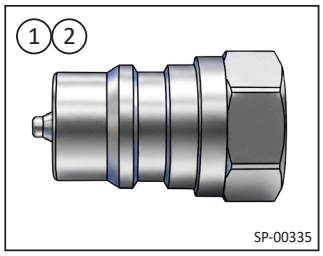

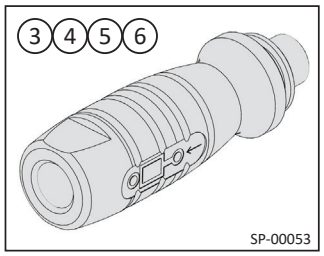

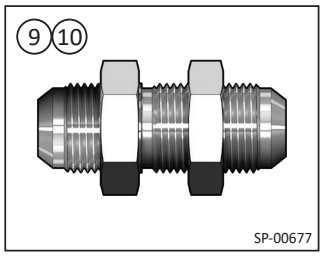

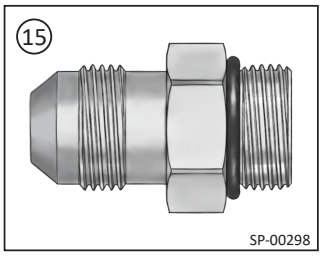

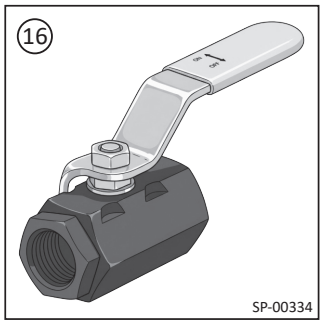

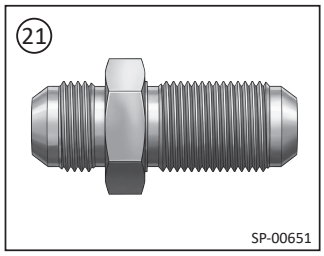

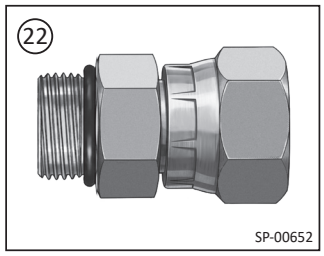

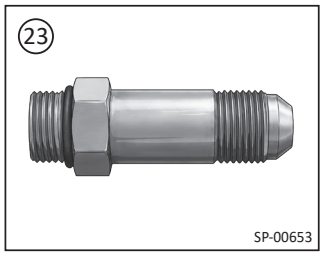

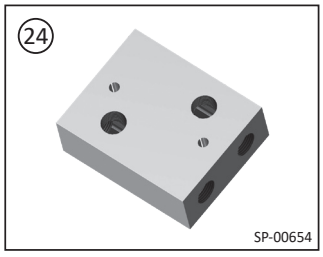

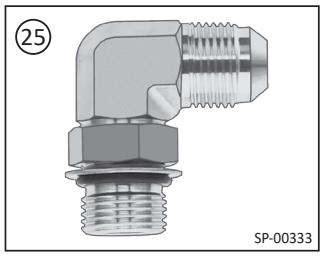

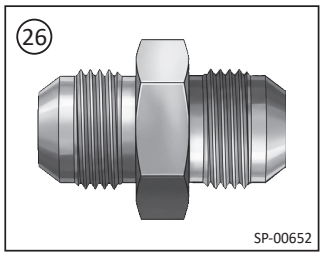

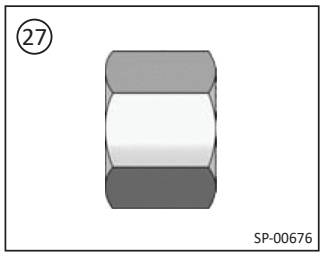

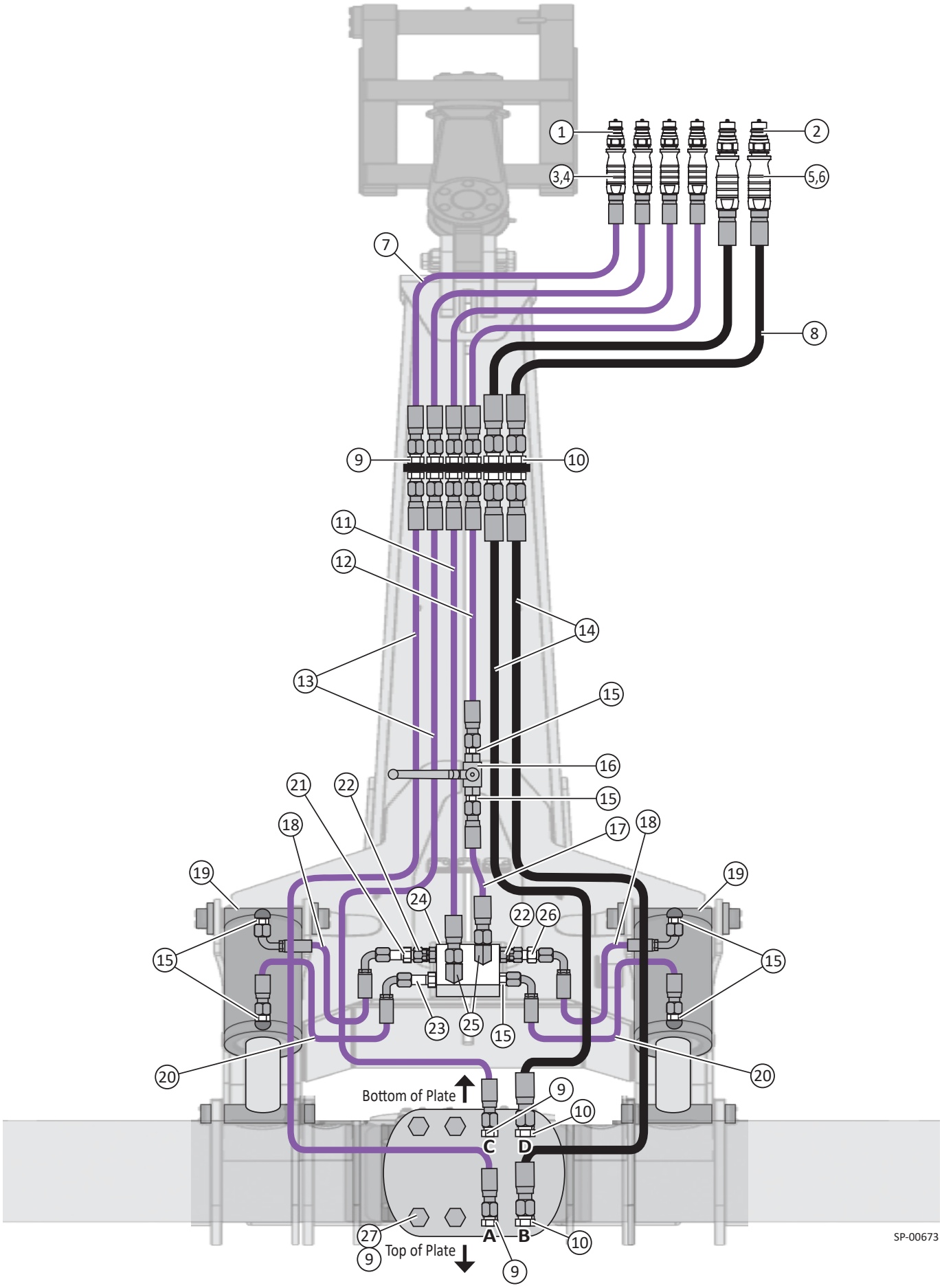
1
2
3,4
5,6
7
8
9
10
11
12
13
14
15
16
15
17
18
18
19
19
21
22
24
22
26
15
15
23
25
15
20
20
Bottom of Plate
9
10
C
D
27
9
Top of Plate
A
B
10
9
SP-00673

Standard FE Scrapers, Frontal Hydraulic System Fittings and Hoses

ID	Part Number	Qty	Description
9	Contact Factory	10	Adapter, 7/8-14 NPT Male to 7/8-14 JIC Male with Jam Nut
10	Contact Factory	6	Adapter, 1 1/16-12 NPT Male to 1 1/16-12 JIC Male with Jam Nut
15	06080078	11	Adapter, 7/8-14 O-ring Male, 7/8-14 JIC Male
27	Contact Factory	4	-10 JIC Female Cap
28	1611FE0578	2	FE1611 Gate Cylinder
29	Contact Factory	4	5/8" ID Gate Cyl Hyd Hose, 7/8-14 JIC Female, 7/8-14 JIC Female Elbow
30	Contact Factory	2	Tee, -10 JIC Fem. Swivel Nut Branch, -10 JIC Male Straight-Thru Ports
31	Contact Factory	2	3/4" ID Cross Tube Hose, 1 1/16-12 JIC Female Elbow, 1 1/16-12 JIC Fem. Elbow

ID	Part Number	Qty	Description
32	1611FE0579	32	FE1611 Push Off Cylinder
33	Contact Factory	2	3/4" ID Push Off Cyl Hose, 1 1/16-12 JIC Male, 1 1/16-12 O-Ring Male
34	Contact Factory	1	Top Hard-Line, 1 1/16-12 JIC Female, 1 1/16-12 JIC Female
35	Contact Factory	1	Bottom Hard-Line, 1 1/16-12 JIC Female, 1 1/16-12 JIC Female
36	Contact Factory	2	3/4" ID Rear Scraper Hyd Hose, 1 1/16-12 JIC Male, 1 1/16-12 JIC Female
37	Contact Factory	2	Elbow, -12 JIC Male, -12 JIC Male
38	Contact Factory	2	3/4" ID Scraper Side Hyd Hose, 1 1/16-12 JIC Male, 1 1/16-12 JIC Female Elbow

* -12 Hydraulic line components are shaded in gray.

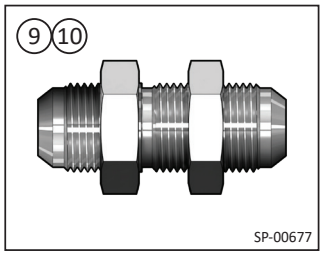

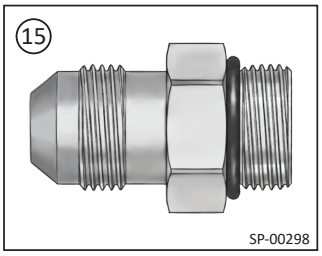

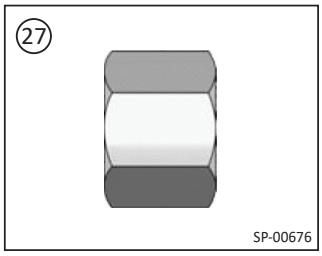

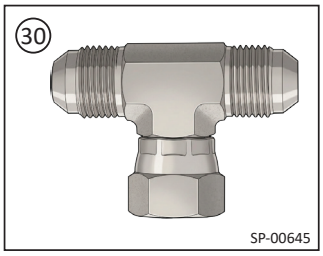

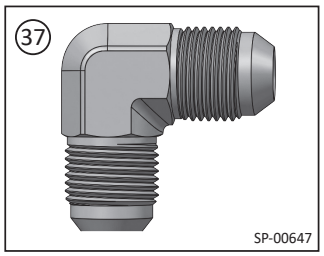

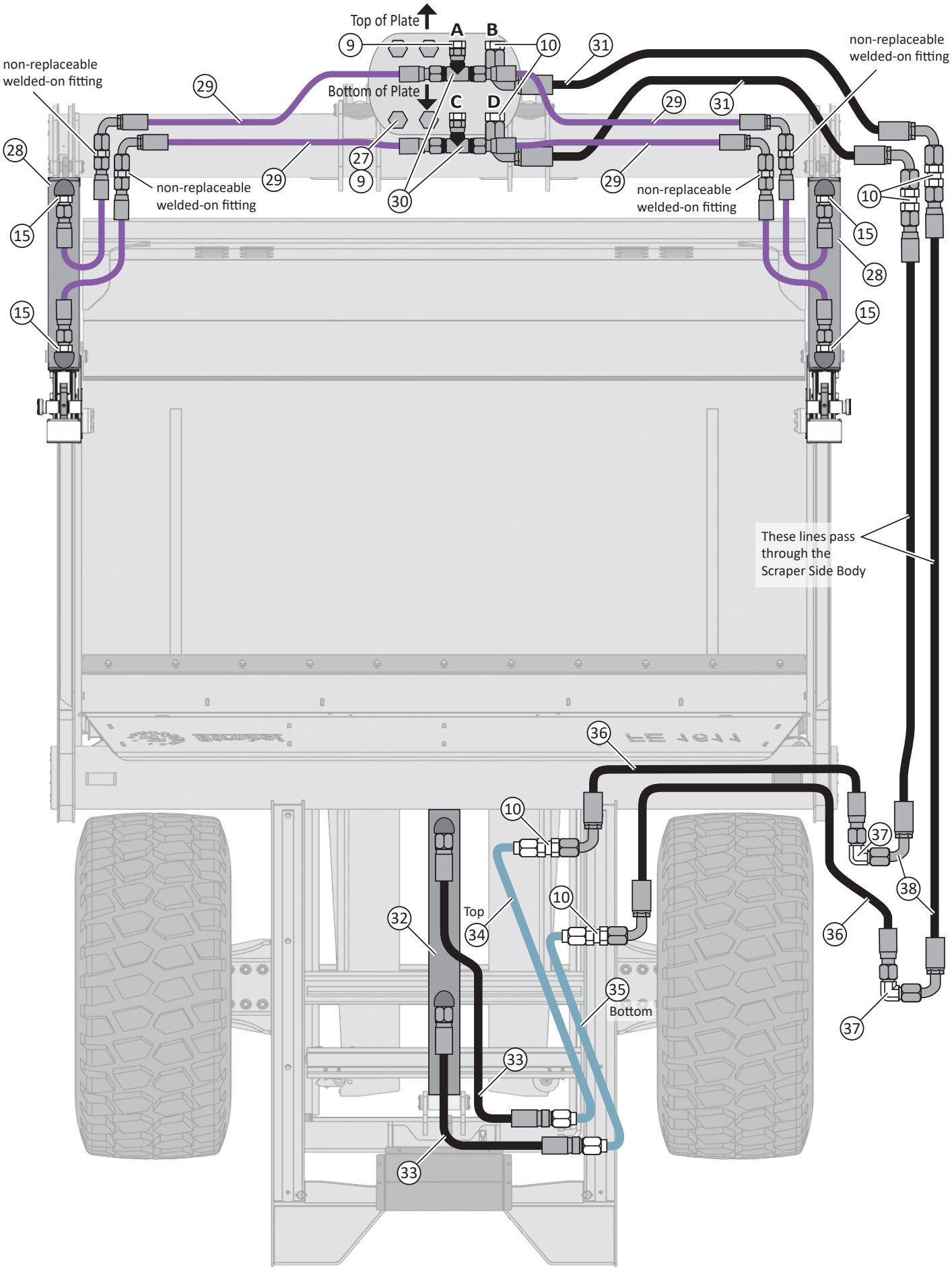
Top of Plate
A
B
C
D
Bottom of Plate
9
10
31
29
27
30
non-replaceable
welded-on fitting
28
15
non-replaceable
welded-on fitting
These lines pass
through the
Scraper Side Body
36
37
38
32
Top
34
35
Bottom
33

FE1611 Hitch Assembly

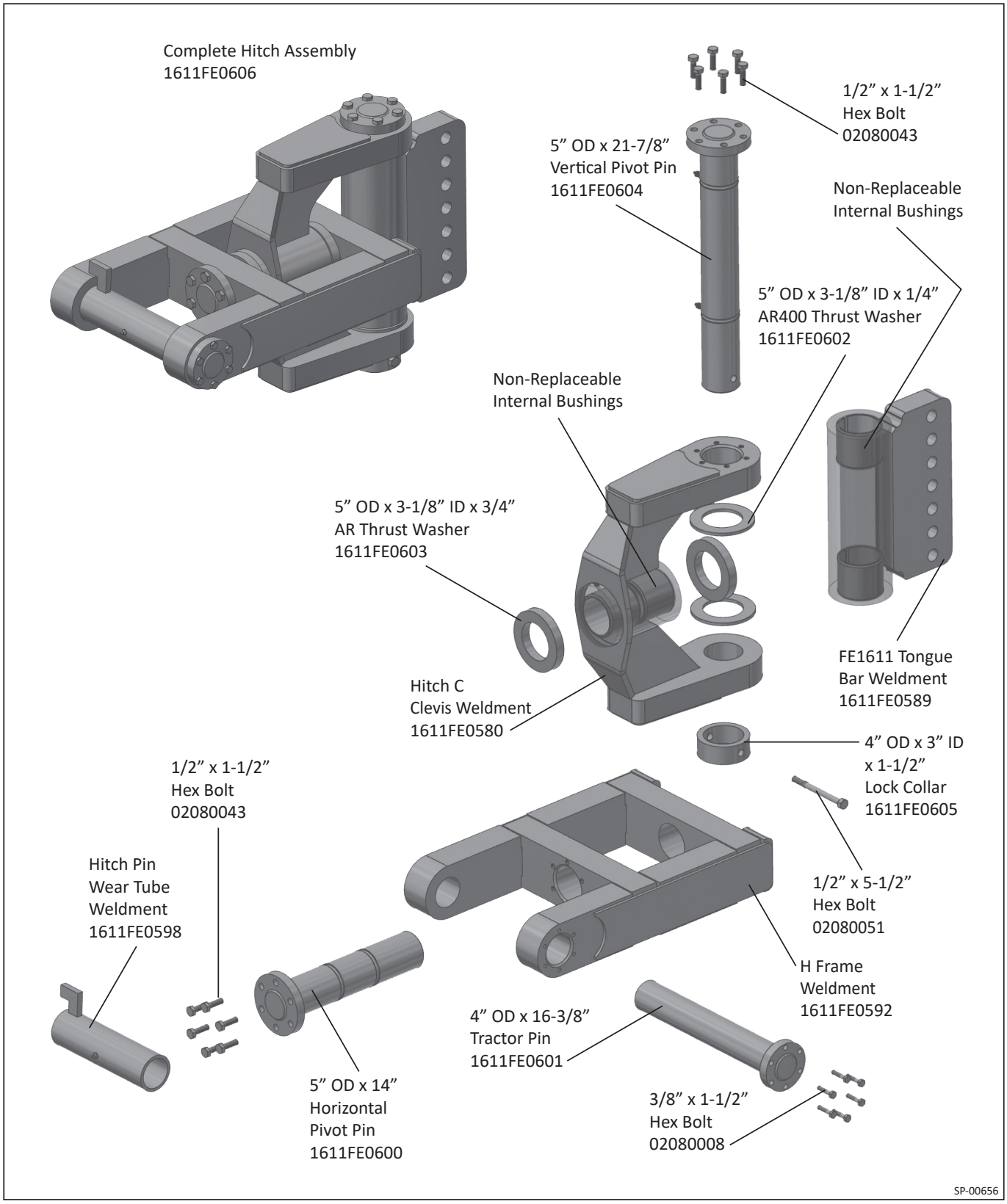

Troubleshooting

Trouble	Problem	Cause / Solution
Cylinder will not maintain its position or drifts from the set position.	Internal cylinder seal leakage.	Replace the cylinder seal kit. Repair or replace the cylinder if necessary.
Cylinder hydraulic fluid leak(s).	Worn or damaged rod seal, bushings, cylinder components, or inadequate lubrication.	Remove and repair or replace the cylinder. Strobel Manufacturing recommends returning the cylinder for professional rebuild service.
Cylinder movement is improper; Cylinder motion tilts, wobbles, is jerky, or not smooth, or not linear.	Worn or damaged bushings, seals, or internal cylinder components. Inadequate lubrication.	Remove the cylinder and inspect for damage. Repair or rebuild the cylinder as required. Strobel Manufacturing recommends returning the cylinder for professional rebuild service. Replace if needed.
Grease zerks will not take grease.	The grease zerk is plugged.	Remove and replace the grease zerk.
	The grease zerk pin is frozen.	Remove and replace the pin.
Hydraulics do not operate properly.	Hydraulic hoses are connected incorrectly.	Connect the hydraulic hoses correctly. Refer to the tractor operator's manual.
Pin is seized, frozen, or difficult to remove.	The pin or connection doesn't move properly, is not lubricated, or is worn.	Remove, clean, inspect, lube, and reinstall the pin.
		Remove the pin or damaged parts and replace.
The material entering the bowl rolls up or is getting sent over the top of the push-off.	Improper cut depth	Adjust the cut depth.
	Improper speed	Adjust the tractor speed.
	Soil or material is excessively wet or sticky.	Wait until soil and weather conditions improve and the material is less sticky.
Push off Rollers do not roll.	The rollers need lubrication.	Check/clean the zerk hole and grease as needed.
	Worn or damaged roller bushing or grease zerk.	Remove all roller assemblies, replace the bushing or zerk, and lubricate the assembly.
Scraper does not cut evenly.	Cutting edge requires adjustment or replacement.	Install proper shims as to adjust the cutting blade or replace the blades.
	Improper tire inflation.	Check tire air pressure. Adjust tire pressure to the specified value.
Scraper does not fill properly.	The cutting edge is not engaged.	Check the lift cylinders.
	The gate is closed.	Open the gate; Check the gate cylinders.
	Improper gate opening.	Adjust the gate opening as necessary.
	The soil is too dry.	Add water to the soil or wait for rain.
	Speed is too high.	Reduce the tractor speed.
The tractor stalls or the scraper bogs down.	The cut is being made too deep.	Adjust cut depth. Start shallow and only increase to what the equipment can handle.
The three-valve hydraulic system will not sequence.	The valve has stopped functioning.	Replace the valve.

Quick Reference Index

C
Checking the Scraper Before Operating or Transporting *23*

F
FE Scraper General Operation *28*

I
Installing a Wheel and Applying Correct Lug Nut Torque *36*

M
Maintenance Schedule *34*

O
Operating Safety *17*

P
Preparation for Scraper Use *20*

S
Safety *6*

FARM EQUIPMENT MANUFACTURERS ASSOCIATION
FEMA FarmEquip.org
MEMBER

SINCE 1946

Made in America

Since 1946 Strobel Manufacturing has been designing and building innovative, durable products that solve real-world problems. Every piece of equipment is built for rugged daily use – robust and durable. We call it Strobel Strong. Welcome to the Strobel family.

© Strobel Manufacturing, Inc. 2026 | All rights reserved.

Strobel

strobelmfg.com |
sales@strobelmfg.com

105 S. Green Street
Clarks, NE 68628
308.548.2254