EARTH MOVING SERIES

PG12, PG14, and PG16 Pro Graders

Operation, Maintenance, and Parts Manual



DO NOT OPERATE THIS EQUIPMENT UNTIL THIS MANUAL HAS BEEN READ AND UNDERSTOOD.

Part Number: 13500009
Original Instructions

Serial Number and Product-Specific Information

- The pro grader serial number is located as shown below.
- When ordering parts, requesting service, or requesting other information, always provide the dealer with the pro grader serial number.
- Record the following information for easy reference.

Model Number		Serial Number	
Date of Purchase			
Dealer		Dealer Phone Number	
City		State	Zip

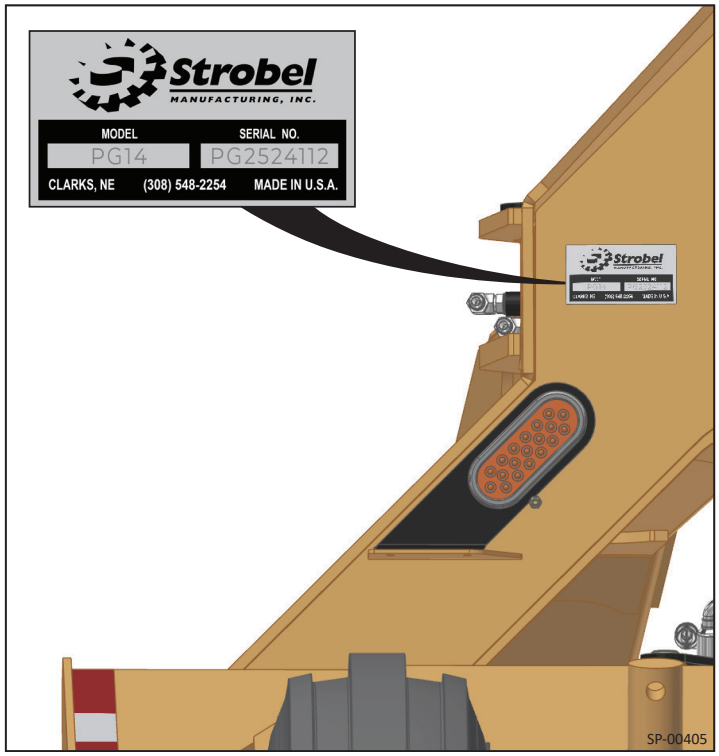

Contents

Serial Number and Product-Specific Information 3

Safety 6

Safety Alert Symbol and Signal Words 6

General Safety Information 6

Safety Decals 7

Safety Decal Details and Locations 7

Before Operating 9

Working On or Near This Pro Grader 10

Hydraulic Power and Pressurized Oil Safety 11

SMV and SIS Signs 12

Wear Personal Protective Equipment 12

Prepare for Emergencies 13

Operation 14

Operating Safety 14

Pro Grader Features 14

Pro Grader Orientation 14

Pro Grader Main Features Identification 15

Pro Graders Specifications 17

Preparation for Pro Grader Use 18

Preparing the Tractor 18

Preparing the Jack Assembly 19

Turning the Hydraulic Cylinder Lock Valve ON or OFF 20

Preparing the Hydraulics Before Operating 21

Hitching/Unhitching the Pro Grader 22

Moving the Tractor Into Position, Hydraulic Connection, and Hitching 22

Unhitching the Scraper 22

Checking the Pro Grader Before Operating or Transporting 23

Verifying the Pro Grader is Ready for Operation or Transport 23

Visually Inspecting Before Operation or Transport 23

Operating Pro Grader Controls 24

Operating the Optional Pro Grader Remote 24

Operating the Optional Pro Grader Remote 25

Pro Grader Basic Operation 26

Operate Safely and Protect the Equipment 26

Five Function Operation 26

Basic Operation Procedure 26

A Few Common Surface-Shaping Techniques 27

Avoid Grader Tire Dog Tracking 27

Safe Operation on Slopes and Grades 28

Transporting the Pro Grader 29

Pro Grader Applications 30

Typical Uses for the Pro Grader 30

Maintenance 31
Maintenance Safety 31
Securing and Supporting the Pro Grader for Maintenance 31
General Blocking and Securing the Pro Grader Procedure 32
Supporting the Pro Grader For Wheel and Tire Replacement 32
Support Locations 33
Maintenance Schedule 34
Lubrication Guide and Schedule 35
As Needed Maintenance 36
Bolt Torque 36
Clearing Out, Freeing Up Top Manifold Solenoid Valves 36
Storing the Pro Grader 36
Replacements and Parts 37
Replacement and Parts Safety 37
Replacing Cylinders and Manifolds 37
Replacing a Wheel 38
Removing a Wheel 38
Installing a Wheel and Applying Correct Lug Nut Torque 38
Replacing the Blades 39
Replacing the Optional Transmitter and Receiver 41
Pro Grader Replacement Parts 42
Pro Grader Spindle and Hub Assembly 42
Pro Grader Wheel and Tire Assemblies 42
Electro-Hydraulic Model, Tractor to Top Manifold Hydraulics 43
Fully Hydraulic Model, Tractor to Top Manifold Hydraulics 44
Electro-Hydraulic Model, Top Manifold to Height and Tilt Cylinders Hydraulics 46
Fully Hydraulic Model, Top Manifold to Height and Tilt Cylinders Hydraulics 47
Electro-Hydraulic Model, Top Manifold to Swing Cylinders Hydraulics 48
Fully Hydraulic Model, Top Manifold to Swing Cylinders Hydraulics 49
Electro-Hydraulic Model, Top Manifold to Valve Manifold Hydraulics 50
Fully Hydraulic Model, Top Manifold to Valve Manifold Hydraulics 51
Electro-Hydraulic Model, Top Manifold to Middle Manifold Hydraulics 52
Fully Hydraulic Model, Top Manifold to Middle Manifold Hydraulics 53
All Models, Yoke Manifolds and Relief Valve Hydraulics 54
All Models, Yoke Front Manifold to Angle Cylinders Hydraulics 55
All Models, Yoke Middle Manifold to Pitch Cylinders Hydraulics 56
Swivel Hitch Assembly, Pro Graders 57
Troubleshooting 58
Pro Grader Troubleshooting 58
Optional Pro Grader Wireless Control Troubleshooting 59
Optional Pro Grader Wireless Control Error Codes 59
Quick Reference Index 60

Safety

Safety Alert Symbol and Signal Words



- This safety alert symbol indicates an important safety message in this manual.
- When you see this symbol, be alert to the possibility of injury or death.

Signal Words: Be aware of the signal words **DANGER**, **WARNING**, **CAUTION**, and **NOTICE**. These signal words indicate a level of safety risk.

DANGER Indicates extremely imminent hazards where death or serious injury will result if these hazards are not avoided.

WARNING Indicates hazards at hand where death or serious injury likely could occur if these hazards are not avoided.

CAUTION Indicates hazards at hand where personal injury likely may occur if these hazards are not avoided.

NOTICE Used to convey important information that is not related to personal safety, such as maintenance, cleaning guidelines, avoiding implement damage, and the like.

GS-0001

General Safety Information



All safety information in this manual is essential and is intended to assist in identifying and preventing incidents that could cause injury, death, or property damage. *Read, understand, and follow this manual and all safety instructions before operating, maintaining, or working near this equipment.*

- **Safety is your responsibility.** As the owner, operator, or supervisor you need to know and be alert to the specific requirements, precautions, and hazards that exist and to make these known to all personnel working with the equipment or in the equipment area, so they too may take any necessary safety precautions that may be required.
- **Prevent accidents by anticipating the result before the accident is caused.** As an owner, operator, or supervisor you are responsible.
- **Allow only experienced personnel to operate this equipment.** Operators need to be trained and familiar with this type of equipment.
- **Never use the equipment for purposes or applications it is not designed for.**
- **Never use any equipment that is damaged or has become unsafe.**

GS-0000

Safety Decals

- Ensure all safety decals/signs are present in each designated location, and install new decal(s) if any are missing or unreadable.
- Ensure replacement parts display the same safety decals.
- Contact Strobel Manufacturing to obtain free replacement safety decals.

SA-0005

Safety Decal Details and Locations

- Following are Safety Decal Identification Images of grader decals with locations drawings showing where these decals attach to each implement model, along with the decal part number.
- Safety decals draw attention to safety concerns, precautions, and possible hazards.

SA-0007

(A) Caution Pinch Point, 04039100



(B) Warning High Pressure Fluid Hazard, 04039113



(C) Reflector Decal, 18190101



(D) Reflector Strip



Safety Decals Locations

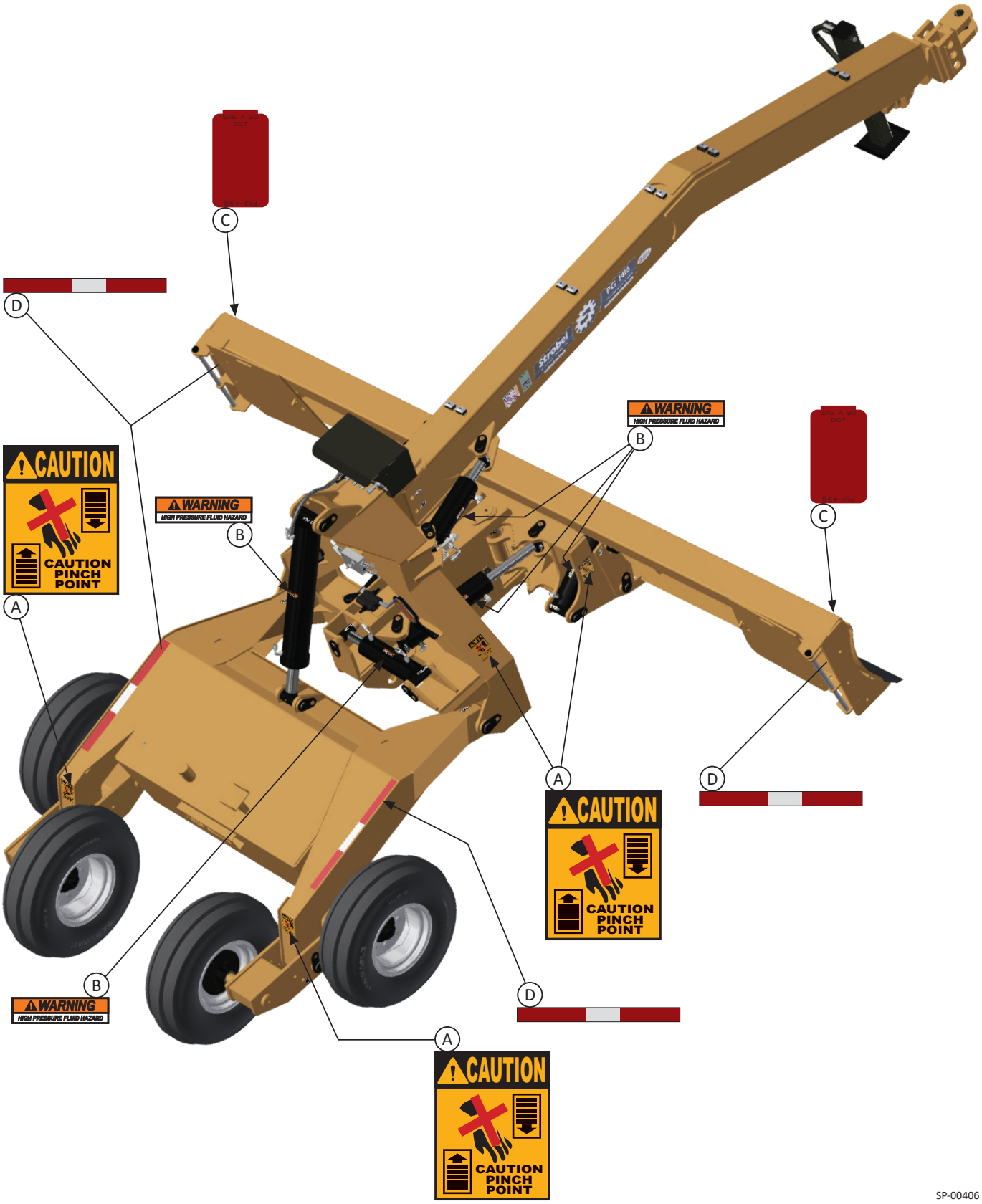

SP-00406

Before Operating

⚠ WARNING



- Walk around the equipment and inspect it. Do not operate a pro grader with damaged parts, tires, or wheels. Do not operate a pro grader with missing parts or lug nuts.
- Check tire condition and ensure tires have proper pressure.



- Never allow anyone who is untrained or underage to drive the towing tractor/vehicle or to operate the equipment. Refer to the applicable laws and safety rules within the local jurisdiction.



- Keep children, untrained persons, any others, and animals away from the equipment when it is parked, operating, or moving. Never allow anyone to ride on or be on the grader.



- Always ensure all persons, animals, buildings, and objects are clear of the equipment path and work area. Prevent striking, crushing, or running over persons or obstacles.



- Always wear a seat belt. The equipment could accidentally overturn, strike an obstacle, or come to an abrupt stop. Wearing seat belts help reduce the chances of serious injury or death.



- Before starting any earth moving or excavation, you must call the local utility notification service all underground utilities must be properly located to stay safe. (Many states require contacting the utility notification service 2–3 days before earth moving begins.)

- In the US, OSHA rules and regulations apply when the machine is used in a workplace or with employees.
- Regulations for graders may differ depending on its use. Agricultural use may be treated differently than construction or commercial hauling. Definitions vary by state.
- Ensure all safety devices are properly installed and that none are missing, damaged, or disabled.
- Ensure the drawbar, hitch pins, and any safety locks are all in place and ready for towing.
- Ensure the grader hydraulic hoses are properly connected to the tractor hydraulic couplers and that hoses are routed properly to prevent kinking, pinching, and damage operation or transport.
- Always follow all applicable operation safety instructions. Understand grader transporting, travel between work areas, and grading are all different types of grader operation.

BB-0007

- Read, understand, and follow the tractor operator's manual.

Working On or Near This Pro Grader

⚠ WARNING



- Never work on, under, or around this grader unless it is securely blocked and properly supported. Use support devices and jacks that are in good condition and rated for the load. Ensure the grader and all components are stable and cannot fall, shift, roll, or move unexpectedly. Failure to properly support the equipment could result in crushing injuries, amputation, or death.

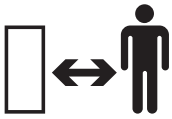

- Never allow anyone to be where they could be struck, crushed, or run over by the equipment.



- During hitching/unhitching and always, check that you and all others are in a safe location that prevents anyone from getting crushed. Ensure no one can get crushed between the pro grader and a tractor, or the equipment and a structure.
- Before performing maintenance, including lubrication, shut off the tractor. Ensure the tractor and pro grader are on solid, level ground and are secured against movement before beginning work.



- Always keep hands, feet, and body clear of the pro grader, cylinders, arms, hinges, hitch, pins, etc., and any other pinch points.
- Completely prevent becoming entangled in the equipment. Don't wear loose-fitting clothing, accessories, dangling items, baggy clothes, draw strings, etc. Secure or tie back long hair.



- Tire blow-out, rim failure, or explosive tire separation may cause injury or death. Only allow trained persons to service wheels and tires.



- Hydraulic fluids, lubricants, and grease are: poisonous, known to cause cancer, and may cause reproductive harm. Ingesting these petroleum products can kill.

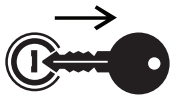

- Always shut off the tractor and relieve all hydraulic pressure before servicing or doing maintenance on the pro grader.

⚠ WARNING



- Only allow trained personnel with proper equipment to service or maintain the tire and wheel assemblies.

- Use only safe work practices, methods, and procedures.
- Never allow maintenance or work to be preformed on the scraper when it is hydraulically raised. Ensure the pro grader is fully lowered and properly supported.
- Ensure the pro grader is free of unnecessary sharp edges, and be careful to avoid cuts from sharp edges.
- Always use correct tools and equipment.

Hydraulic Power and Pressurized Oil Safety

⚠ WARNING



- Escaping hydraulic fluid under pressure can penetrate the skin and cause serious injury, infection, or death. Use cardboard or wood to check for hydraulic system leaks. Never use your hands. Get immediate medical help if hydraulic fluids penetrate the body tissue.



- Always relieve hydraulic system pressure before disconnecting from the tractor hydraulic system, making any adjustments, or performing maintenance on the hydraulic system.

- Always purge the air from the hydraulic system before operating.
- Never raise the tractor hydraulic system pressure above 3,000 psi. Implement hoses could burst.
- Position hoses and fittings carefully and to prevent failure due to kinking, pinching, crushing, rubbing, and weather exposure over time. Prevent hoses from being struck.
- Check hydraulic hoses and fittings periodically to prevent these from failing. Make sure all fittings, clamps, and hoses are installed properly and in good condition.
- Always repair any oil leaks. Repair any hoses that are kinked, crushed, weather cracked, or worn.
- If an accident occurs, seek medical attention immediately.

SMV and SIS Signs



- When transporting this equipment, ensure a slow moving vehicle sign (SMV) is installed in a location on the rear end of the equipment visible to other vehicles from 500’ away.
- Install this emblem at a height of approximately 2’–6’ from the ground.



- When required by local regulations, install a Speed Identification Symbol (SIS) sign in a visible location on the back of the equipment.

Wear Personal Protective Equipment

⚠ CAUTION



- Always wear proper personal protective clothing and equipment appropriate for each task.
- Wear eye proper protection near flying particles, when near a hydraulic system/pressurized fluids, and when around potential eye hazards.



- Wear steel-toed shoes during operation or when working on this equipment.



- Wear hearing protection whenever noise levels may cause hearing damage.
- Avoid wearing anything that could impair hearing such as earbuds or headphones.



- Wear protective work gloves.



- Wear high-visibility clothing when assisting operation or whenever you are in the work area of the tractor and/or pro grader.

PP-0002

Prepare for Emergencies

⚠ CAUTION



- Keep a properly stocked first aid kit readily available.



- Keep a properly charged fire extinguisher readily available.



- Keep an emergency contact list for medical, fire, and rescue services nearby and on your phone.

GS-0003

Operation

Operating Safety

⚠ WARNING

Read, understand, and follow all safety instructions in this manual, on the safety decals, and in the tractor manual before operating this equipment. Always follow all safety instructions.

- Identify, anticipate, stay alert to, and assess the safety risks of each potential hazard.
- Read and follow the **Before Operating Safety** section on page 9 of this manual before starting operation, and refer to this manual's **Safety** section starting on page 6.
- Always exercise extreme caution when operating on side slopes, when turning the tractor toward the tongue or blade, when reversing, and when making sharp turns.
- Check that tractor brakes work properly before transporting or operating on inclines.
- Prevent crushing injuries. During hitching and unhitching, and all other operations, ensure no one is between the tractor and pro grader or between the equipment and any structure.
- Keep people, animals, buildings, and objects clear of the pro grader path and work area. Prevent striking, crushing, or running over persons or obstacles.
- Operate the pro grader only from the tractor operator's seat.
- Always maintain control of the pro grader and travel at a safe speed that allows you to do so.
- Operate safely on snow, on ice, and for current conditions; avoid working in the dark. See the tractor manual.
- Every time before exiting the tractor operator's station, put the transmission in park, lower the pro grader, set the parking brake, turn off the engine, remove the key, and wait for all movement to stop.

OP-0007

Pro Grader Features

Pro Grader Orientation

Top View

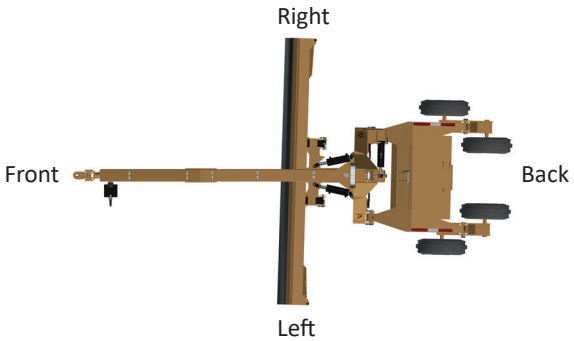

Side View



SP-00445-6

Pro Grader Main Features Identification

Elevated Rear Three-Quarter View

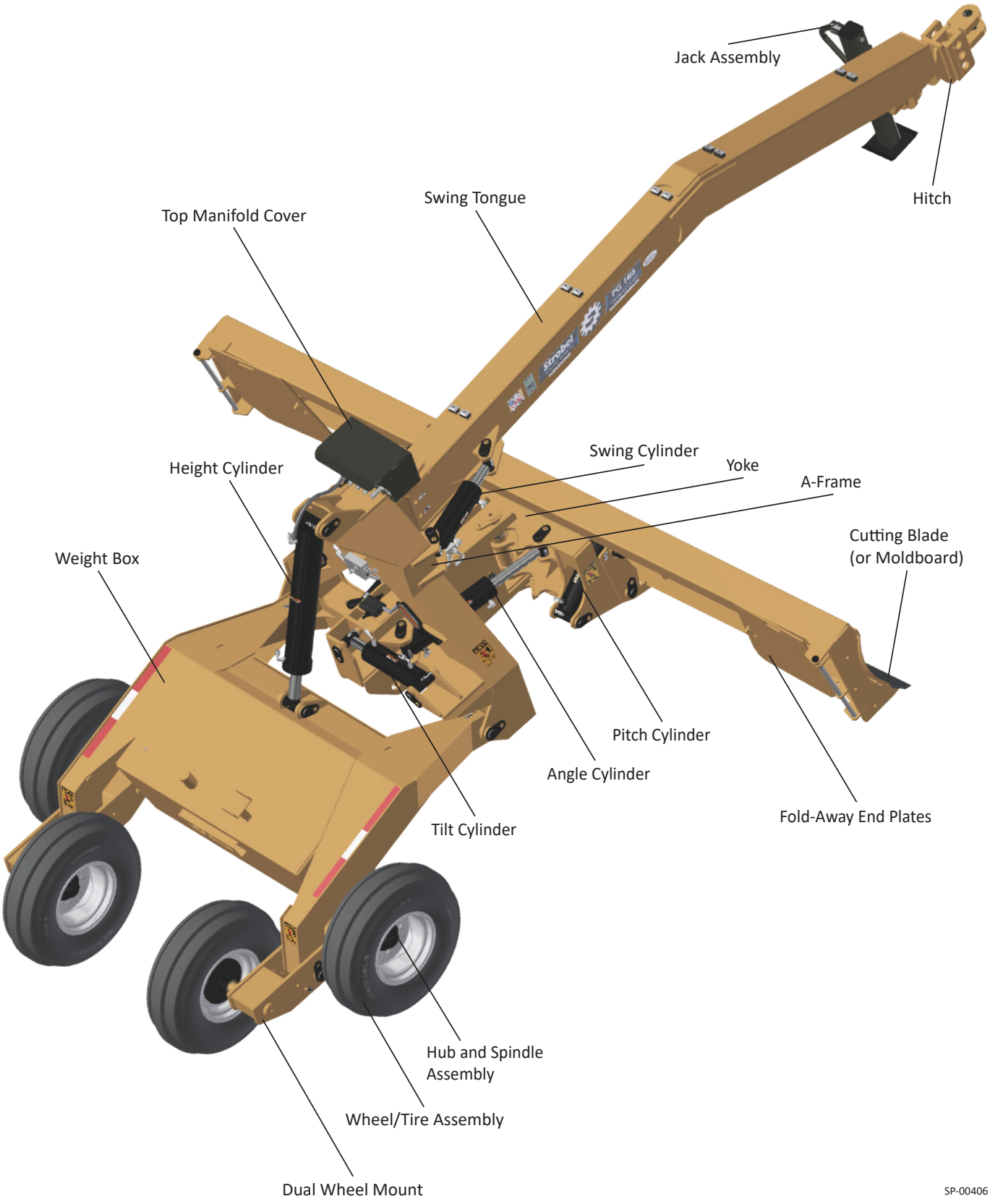

SP-00406

Elevated Front Three-Quarter View

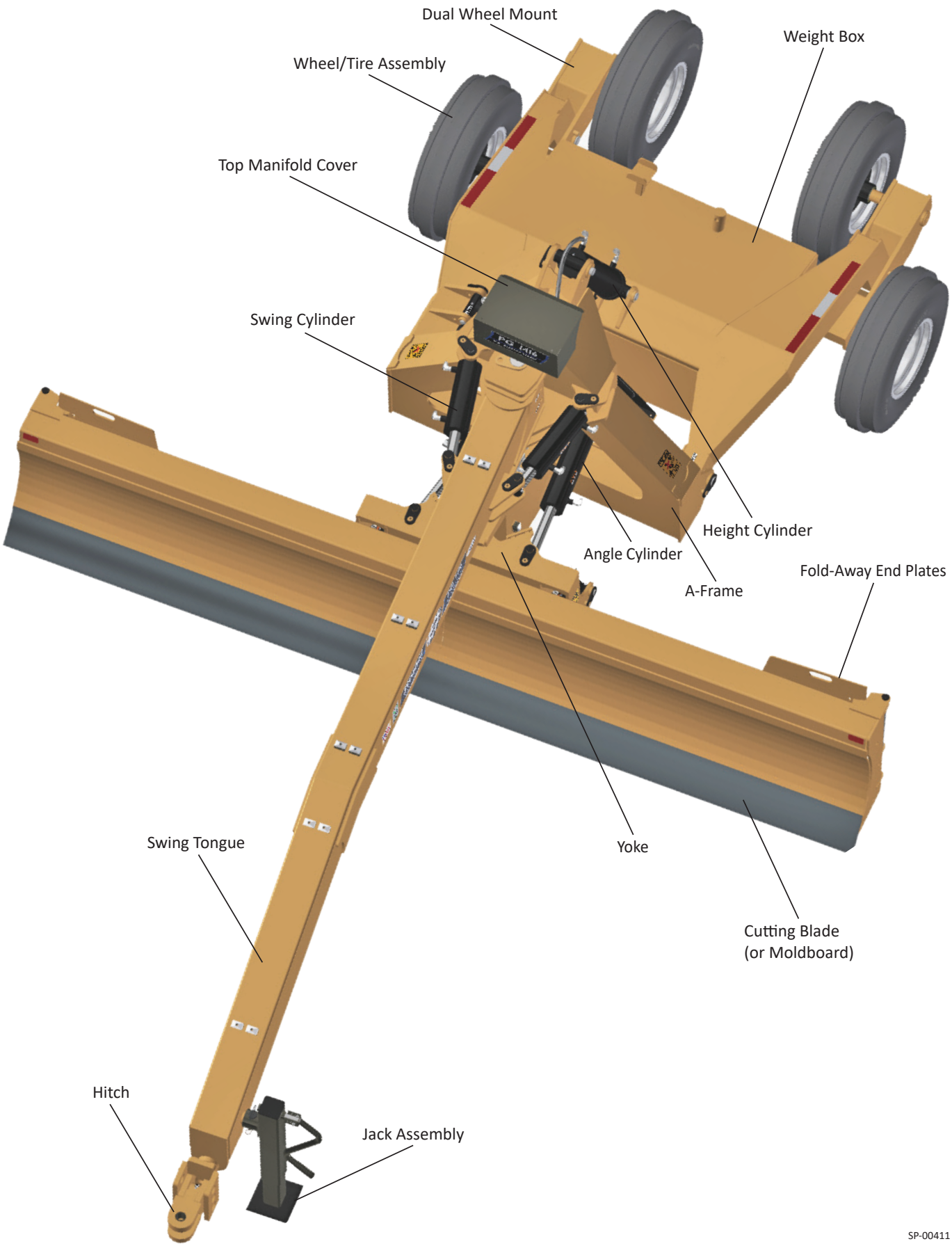

SP-00411

Hitch Features

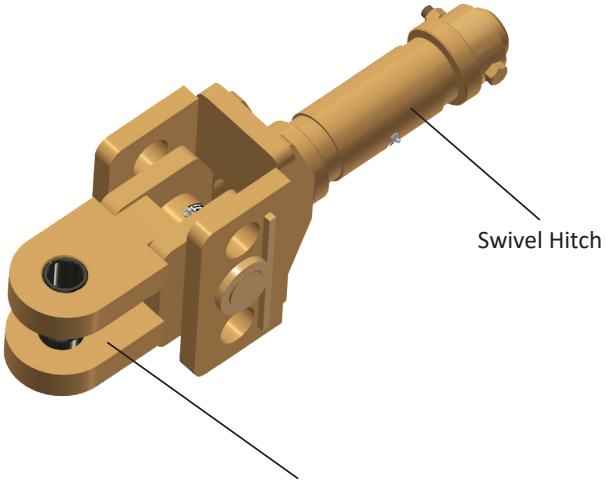

Hitch Options (See page 57.)
- 1/2” Pin Clevis Hitch
- 2” Pin Clevis Hitch
- 1/2” Hammer Strap Hitch
- 2” Hammer Strap Hitch

SP-00494

Pro Graders Specifications

Specification	Pro Grader PG 12	Pro Grader PG 14	Pro Grader PG 16
Blade	(2) 5/8” x 8” x 6’ DBC	(2) 5/8” x 8” x 7’ DBC	(2) 5/8” x 8” x 8’ DBC
Transport Width	8’ 6”	9’ 10”	11’ 4”
Transport Length	14’ 9-1/2”	15’ 6”	16’ 3”
Approximate Weight	9,200 lb	9,300 lb	9,400 lb
Spindles	(4) 2-1/4” OD x 17” / 4,500 lb	(4) 2-1/4” OD x 17” / 4,500 lb	(4) 2-1/4” OD x 17” / 4,500 lb
Rim	8-bolt	8-bolt	8-bolt
Tire-Size	11L-15 (8 ply) Tru-Trac	11L-15 (8 ply) Tru-Trac	11L-15 (8 ply) Tru-Trac
Blade Swing	45°	45°	45°
Tilt	15°	15°	15°
Pitch	55°	55°	55°
Lift Cylinder	3-1/2” x 24”	3-1/2” x 24”	3-1/2” x 24”
Side Shift	60”	60”	60”
Hydraulic Remotes Required	1	1	1
HP Required	150–200 HP	200–250 HP	250–300 HP

Preparation for Pro Grader Use

Preparing the Tractor

- Choose a tractor with sufficient size, weight, horsepower, brakes, and control to safely pull a fully loaded scraper even in wet or extreme conditions, and refer to the tractor manual or tractor dealer for limits.
- Tractor hydraulics must supply a minimum of 20 gal/min flow (76 L/min) at 2,500 psi (17,200 kPa). Ensure the tractor reservoir has enough fluid.
- Always follow all tractor instructions for operation, tires, wheel settings, weights, equipment connection, and hydraulics.
- Ensure the tractor three-point linkage is secured to prevent swinging and damage to tires or hydraulic hoses.
- Ensure the hitch pin is secure and properly locked.
- Ensure the tractor drawbar is rated for the application and securely connected to the pro grader hitch.
- Check that all brakes are working correctly.
- Ensure the tractor is properly ballasted for safe, controlled pro grader operation; refer to the tractor manual.
- Ensure all lights, reflectors, and safety signs are installed and functioning properly.
- Ensure the jack is secured to the storage mount.

Preparing the Jack Assembly

Jack in the Parked Position

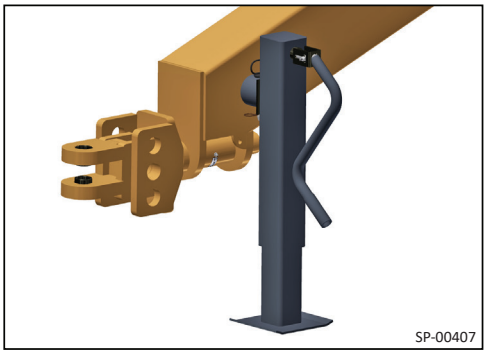

Jack in the Transport Position

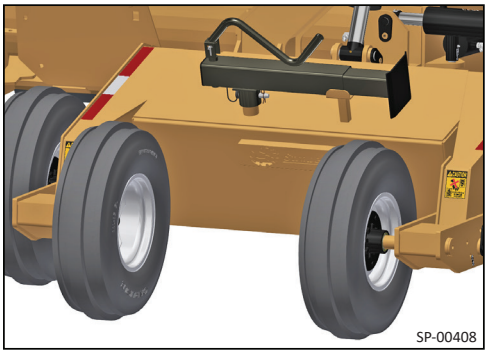

1. Remove the jack assembly from the jack mount.

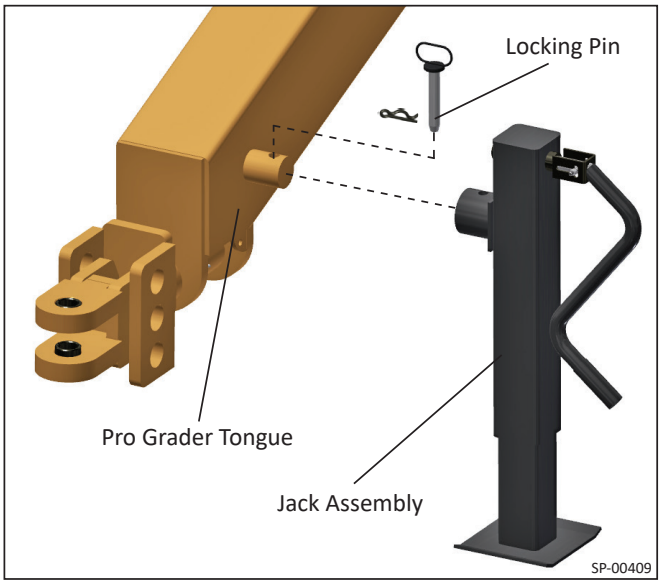

2. Securely attach the jack to the transport mount.

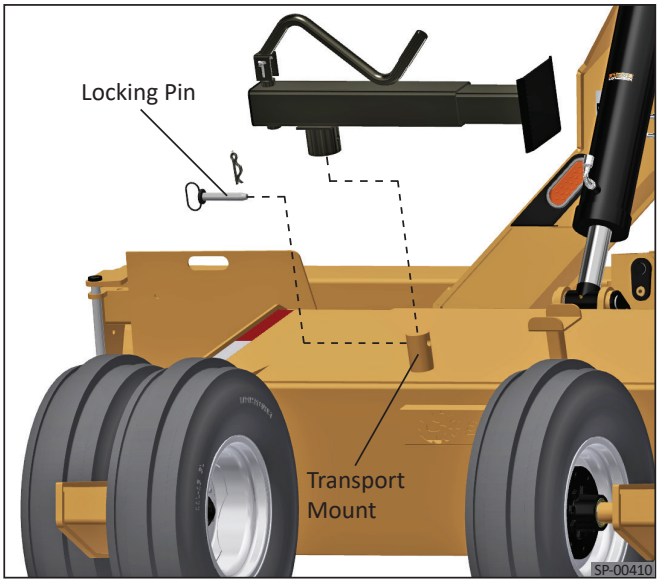

Turning the Hydraulic Cylinder Lock Valve ON or OFF

⚠ WARNING

- Always relieve hydraulic system pressure before disconnecting hydraulic hoses or performing maintenance, service, or adjustments.
- Prevent unintended movement of the hydraulic lock valve handle.

Important
Always fully open or fully close the ball valve. Handle movement is limited to 90 degrees. Leaving the valve partially opened or partially closed can cause valve deformity or damage.

1. OPEN and turn ON the hydraulic lock valve to allow the tractor hydraulic system to engage the pro grader hydraulic circuit.
2. To OPEN the valve, turning the valve ON:
   Turn the valve handle counterclockwise until it is in line with the valve body centerline in the fully open position or on position.
3. CLOSE and turn OFF the hydraulic lock valve to: disengage the pro grader hydraulic circuit from the tractor hydraulic system, maintain pro grader hydraulic circuit equilibrium, and maintain the current position of the hydraulic cylinder in the affected hydraulic circuit.
4. To CLOSE the valve, turning the valve OFF:
   Turn the valve handle clockwise until it is 90 degrees from the valve body centerline in the fully closed or off position.

OPEN and turn ON the hydraulic lock valve.

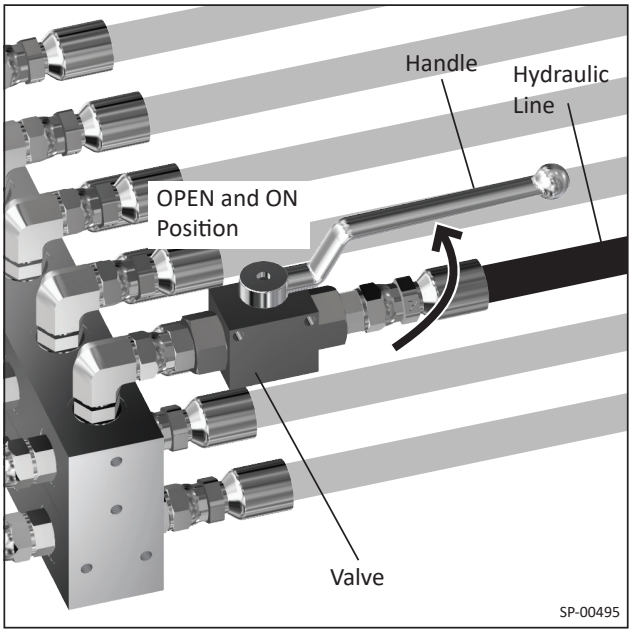

CLOSE and turn OFF the hydraulic lock valve.

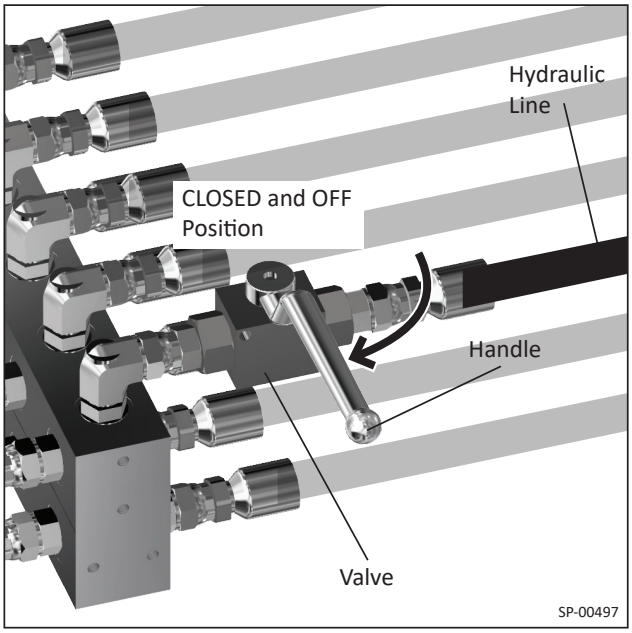

* The fully hydraulic pro grader top manifold and hydraulic fittings are shown in the two images above.

Preparing the Hydraulics Before Operating

⚠ WARNING

- If a hydraulic failure or leak occurs, immediately shut down the tractor and relieve all hydraulic pressure.
- Always relieve all hydraulic pressure and disconnect the hydraulic system from the tractor before replacing, servicing, or adjusting any hydraulic component.
- Always shut off and disconnect electrical power before making any changes to the electrical wiring.

1. Inspect hoses and fittings for leaks, cracks, damage, or wear. Ensure none are kinked, twisted, rubbing, damaged, or worn, and that hose clamps and straps are secure. Make replacements as needed.
2. Check the tractor hydraulic oil level; add the recommended oil if necessary.
3. Ensure the hydraulic oil is clean. Clean the hydraulic couplers on the tractor and pro grader before connecting the hydraulic system.

   Important
   The pro grader has precision valves. Keep hydraulic oil and hydraulic couplers clean and free of dirt, debris, and contamination.
4. Connect the pro grader hydraulic hoses to the appropriate tractor hydraulic outlets.

Recommendation

- Verify that each labeled control corresponds to the correct Pro Grader function.
- If a labeled control does not perform the correct function, reconfigure the hydraulic hose connections or electrical wiring as necessary until all controls operate the intended functions.

5. Before leaving the hitching area, operate each hydraulic control and verify that the corresponding cylinder fully extends and retracts as intended.
6. Observe the pro grader while testing the hydraulics and watch for any possible hydraulic failures or leaks.

Hitching/Unhitching the Pro Grader

⚠ WARNING

- Ensure there is adequate lighting and that you can see clearly to make all connections and preparations.
- Relieve all hydraulic pressure, and turn off the hydraulic lock, and prevent the hydraulic lock valve handle from unintentional turning.
- When hitching and making hydraulic connections and whenever someone is in the area between the tractor and pro grader, ensure both the tractor and pro grader are completely immovable, and that both are on solid level ground.
- During preparation for hitching/unhitching and connecting/disconnecting hydraulics keep the assistant guiding the tractor to the pro grader hitch a safe distance from the tractor and pro grader whenever the both are not secured to prevent movement.
- **Every time before you exit the tractor, put it in park, apply the parking brake, shut it off, remove the key, and ensure the tractor can't move. Then exit the tractor.**

Moving the Tractor Into Position, Hydraulic Connection, and Hitching

1. Using the jack crank, raise or lower the Pro Grader tongue to align the hitch with the tractor drawbar.
2. Position the tractor directly in front of the Pro Grader and align it with the hitch. Before backing toward the pro grader, reduce the engine speed to slowest idle.
3. Staying clear of the area between the tractor and the Pro Grader, an assistant should use hand signals to direct the operator while the tractor is slowly reversed toward the hitch. Keep the tractor and pro grader properly aligned during hitching.
4. Keep the tractor at slowest idle while positioning for hitching.
5. Once in position for hitching, apply the parking brake, turn off the tractor, remove the key, and exit.
6. Securely connect the tractor drawbar to the Pro Grader hitch using the proper clevis pin and retaining hardware.

Unhitching the Scraper

Important
Each time you exit the tractor, apply the parking brake, shut off the engine, and remove the key.

1. Park the pro grader on firm, level ground in a safe area.
2. Place adequate 4" x 4" blocks or equivalent supports beneath the blade and lower the blade firmly onto the supports.
3. Ensure the tractor and pro grader are stable and secured against movement.
4. Open the hydraulic lock valve, fully relieve all hydraulic pressure, and disconnect the pro grader hydraulic couplers from the tractor.
5. If equipped with GPS or other electrical accessories, disconnect the electrical connection between the pro grader and the tractor.
6. Unhitch the pro grader from the tractor and move the tractor safely away from the pro grader.

Checking the Pro Grader Before Operating or Transporting

⚠ WARNING

- Perform the checks in this manual section before operating or transporting.
- Before inspecting or connecting the tractor and pro grader, set the tractor parking brake, shut off the tractor, remove the key, and ensure the tractor and pro grader are absolutely immovable. Then check the pro grader.
- Ensure the tractor drawbar, hitch, hitch pins, and any safety locks are all securely in place and ready for towing.
- Ensure the pro grader hydraulic hoses are properly connected to the tractor hydraulic couplers and that hoses are routed properly and can't be kinked or damaged during towing.
- This pro grader is over-width. Angle the blade sharply before transport to reduce the width.

Verifying the Pro Grader is Ready for Operation or Transport

⚠ CAUTION

Ensure lug nuts are properly torqued to prevent loss of control, injury, and/or equipment damage.

- See also **Preparing the Tractor** on page 18.
- Before transport, raise the Pro Grader only to the minimum height necessary for ground clearance and safe operation. Excessive transport height can reduce stability and machine control.
- Before transport, ensure the hydraulic lock valve is in the OFF position.
- Check for any damaged, worn, loose, or missing hardware.
- Ensure the pro grader is properly lubricated as indicated in **Lubrication Guide and Schedule** on page 35.
- Check for correct tire pressure verify the tractor brake pedals are locked together.
- Check the tractor hydraulic oil level; add oil if needed.

Visually Inspecting Before Operation or Transport

Before each use, visually inspect the tractor, pro grader, and surrounding area for operation or transport.

- Inspect the pro grader and blades; replace any damaged or worn parts.
- Ensure all pins are present, secure, and properly retained. Replace any worn, damaged, or missing pins or parts.
- Verify hydraulic cylinders, hoses, fittings, and other components are positioned correctly and are leak-free.
- Confirm all shields, guards, covers, attachments, and connections are secure and functional.
- Ensure the jack is attached to its storage mount and all equipment is fully ready for operation.
- Ensure all persons are clear of the equipment before starting the tractor.

Operating Pro Grader Controls

Operating the Optional Pro Grader Remote



SP-00451



SP-00483

Joystick Control		Control Function
PITCH	Back	Pitches the cutting blade backward 
	Forward	Pitches the cutting blade forward 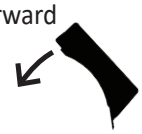
SHIFT	L	Shifts (swings) the grader to the left 
	R	Shifts (swings) the grader to the right 
ANGLE	R	Angles the cutting blade right 
	L	Angles the cutting blade left 
HEIGHT	Down	Lowers the cutting blade 
	Up	Raises the cutting blade 
TILT	L	Tilts the cutting blade left 
	R	Tilts the cutting blade right 
LIGHTS	On/Off	Turns the Lights on and off 

Operating the Optional Pro Grader Remote

⚠ WARNING

- Unintended grader movement could result from remote-control system malfunctions, hydraulic failures, operator error, or radio signal interference.
- Constantly maintain visual contact with the grader, keep all persons clear of the machine and its moving components, and stop operation immediately if the grader does not respond as expected.

The remote wirelessly operates grader functions by communicating with the receiver on the grader when in range.

- Press the POWER button to turn on the remote. Press and hold the POWER button to turn off the remote.
- Press push buttons one at a time to activate each grader function.
- A delay of less than one second between pressing a button and equipment response is normal.

Wireless Remote

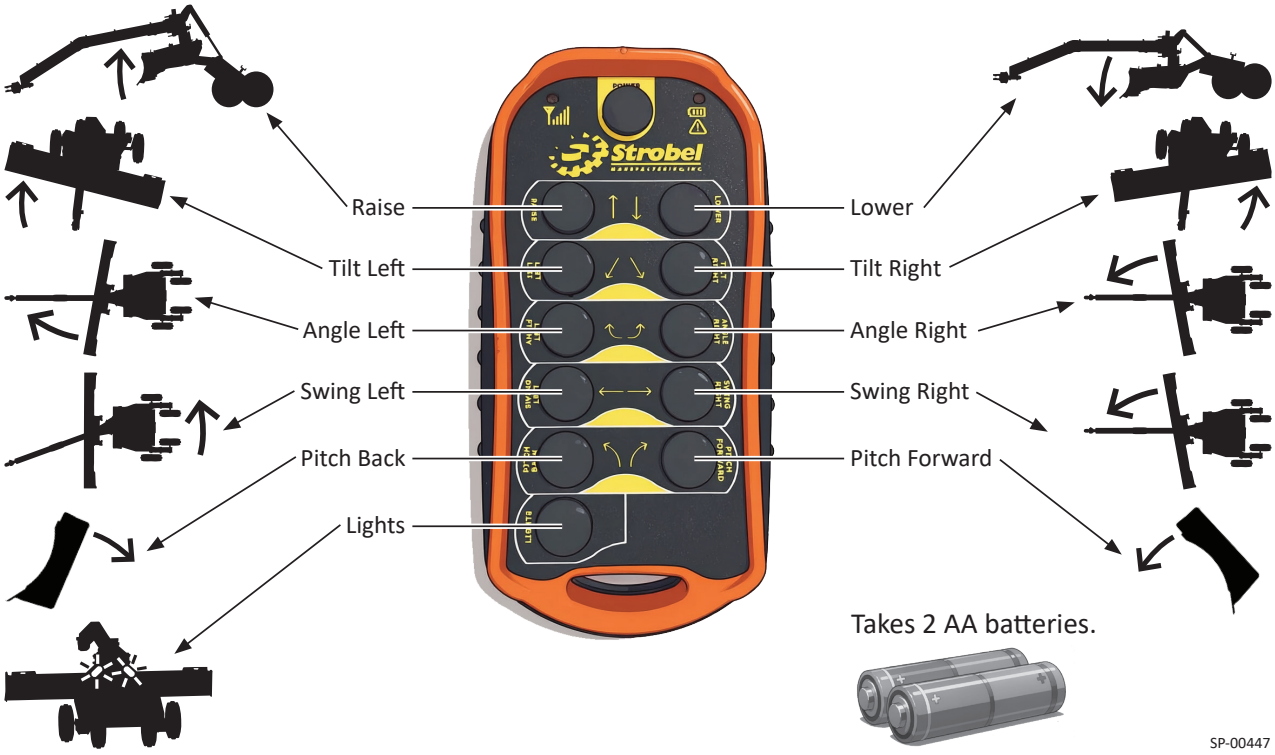

Consult a dealer or radio/TV technician if RF interference occurs or is suspected. Some examples of possible RF interference are:

- The equipment doesn't respond to the controls.
- Signals are cutting in and out or behaving erratically.
- Nearby radio-frequency (RF) devices or equipment may interfere with the remote-control signal.
- The equipment seems to be picking up signals from unintended sources.

Note

Complies with FCC Class B computing device limits. Use shielded cables only on this equipment. Making modifications to the equipment without manufacturer approval, installing non-approved equipment or installing unshielded cables is likely to result in RF interference and could void the user's authorization to operate this wireless device.

- The radio is designed to operate at temperatures of -40°F (-40°C) and above.

Pro Grader Basic Operation

Operate Safely and Protect the Equipment

- Always follow all tractor safety instructions, including instructions for operating on slopes.
- Do not operate the grader on slopes exceeding 15%. Reduce the maximum allowable slope as needed based on tractor configuration, traction, ground conditions, load, and the material being graded.
- Read and follow all instructions in the Safety section of this manual, **Operating Safety** instructions on page 14, and **Safe Operation on Slopes and Grades** instructions on page 28.
- Do not operate, especially on slopes, after heavy rain, or on unstable ground, surfaces, or material.
- Always maintain clear visibility of the grading area and travel path.
- Watch for drop-offs, ditches, rocks, utility structures, and other hidden hazards.

Five Function Operation

- *Raise/Lower the Blade* to adjust cut depth.
- *Tilt the Blade Left or Right* to create or work on tapered or crowned surfaces.
- *Angle Blade Left or Right* (when viewed from above) to direct material flow and side cast material.
- *Side Swing or Shift the pro grader* to contour grade, grade edges, and precision grade.
- *Pitch Blade Forward or Backward* to increase either cutting or spreading efficiency.

Standard 5-valve, fully hydraulic pro graders used with closed valve tractor hydraulics offer smoothest function operation.

Basic Operation Procedure

Tailor operation to the operating tasks at hand. Start slowly and build familiarity with the pro grader.

1. **Start a Grading Pass.**
    a. *Drive forward slow* at a consistent speed.
    b. *Lower the blade gradually* to the ground. Avoid contact with large, hard objects or matter.
    c. *Adjust the blade pitch forward* (slightly) to cut loose material or backward to spread material.
    d. *Angle the blade gradually left or right* to direct material where needed.
2. **Side swing or shift the grader adjusting to the terrain** as needed to follow contours and maintain alignment when grading along slopes, curves, shoulders, or edges.
3. **Tilt the Blade Left or Right** to create crowned surfaces, follow uneven terrain, establish proper slope, and improve drainage.

A Few Common Surface-Shaping Techniques

Important
Blade settings and grading techniques should be adjusted based on terrain conditions, material type, available traction, and operating speed.

Use proper grading techniques and regularly practice to achieve the desired results.

Crown a Road or Surface

1. Position the grader near the center of the road or surface, then slightly tilt and pitch the blade forward.
2. Angle the blade slightly by moving one end forward to spread material evenly across the surface.
3. Make one or more additional passes as needed.

Side Ditching

1. Angle the leading end of the blade fully toward the ditch side.
2. Side shift and tilt the blade into the ditch as needed.
3. Adjust blade pitch to achieve the desired cutting and material flow.

Fine Grading

1. Make small raise and lower adjustments to the blade.
2. Slightly pitch forward and angle the blade to spread material evenly.
3. Adjust the end lifts as needed to improve surface smoothness and eliminate surface irregularities..

Avoid Grader Tire Dog Tracking

- Keep the grader tires aligned with the direction of travel.
- Avoid grader tire dog tracking or operating with the tires dragging at an angle. Doing so can cause premature tire wear and damage to grader components.

Grader Tires Aligned with Direction of Travel

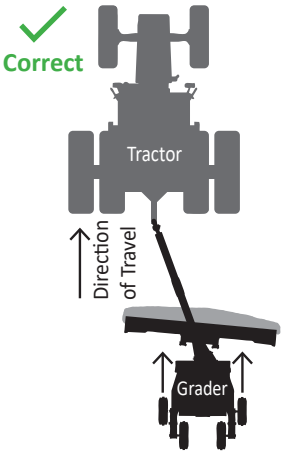

Grader Tires Dog Tracking, Tires Dragging at an Angle

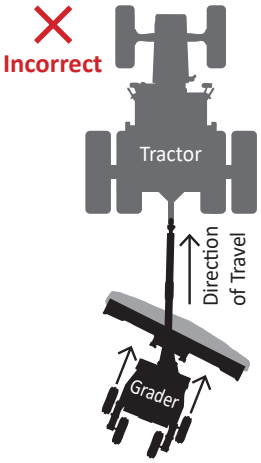

Safe Operation on Slopes and Grades

⚠ WARNING

Failure to operate safely on slopes and grades can result in loss of control, rollover, collision, serious injury, or death.

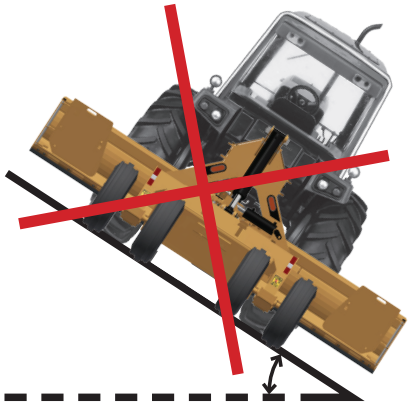

- Stay clear of slopes with terrain, turns, and conditions that are hazardous.
- Operate only on slopes (no greater than a 15°) that the tractor can safely traverse. Do not exceed the tractor manufacturer's operating limits.
- Avoid operating across slopes whenever possible and apply extreme caution. When conditions permit, travel straight up or down slopes.
- Reduce speed when ascending or descending slopes, lock tractor brakes together, and maintain control of the tractor and Pro Grader at all times.
- Avoid sudden steering, braking, acceleration, or directional changes.
- Stay clear of drop-offs, ditches, embankments, soft ground, and other hazardous terrain that could cause rollover or loss of control.
- Keep all persons away from the tractor and pro grader during operation.

OP-0008

Before Operating on Slopes

- Do not operate during unsafe weather or ground conditions, including ice, snow, rain, mud, high winds, loose soil, or poor visibility.
- Verify proper brake, steering, and tire function.
- Consider tractor size, power, traction, ballast, load, and ground conditions before operating on slopes.

Safe Operating Practices on Slopes

- Select a low gear before ascending or descending slopes.
- Never coast downhill in neutral.
- Watch for uneven terrain, excessive bouncing, and sudden impacts that could affect stability.
- Avoid turning on slopes whenever possible.

Transporting the Pro Grader

⚠ WARNING

- Drive slower than when not towing an implement and obey posted speed limits. Don't transport at unsafe speeds. Do not exceed 25 mph (40 kph) on highways or 10 mph (16 kph) off-highway.
- Frequently check for traffic from the rear, and during turns. Check mirrors often. Use turn signals.
- Reduce speed, use extra caution, and allow additional distance when turning or braking. Maintain sufficient stopping distance and ensure you can stop safely under all conditions.
- Keep all persons, children, animals, vehicles, buildings, and obstacles clear of the pro grader and its travel path. Prevent striking, crushing, or running over people, animals, or objects.
- Be aware that the pro grader may be wider than the tow vehicle.
- Never allow anyone to ride on or be on the pro grader.
- Be alert to electrical hazards. Electrocution can occur through direct contact with power lines or by electrical arcing without direct contact. Stay clear of all overhead and underground electrical lines and equipment.
- Use 4-way flashers on highways where permitted. (Proper 4-way flashers do not cancel the turn signal, but work in conjunction with it.

Reduce speed on rough terrain, slopes, curves, and uneven surfaces.

To protect grader tires from excessive wear or damage, do not exceed 20 mph (32 km/h).

Pro Grader Applications

Important

- This list is not exhaustive and may not apply to all situations.
- Application suitability depends on terrain, operating conditions, and specific job requirements. Use sound operator judgment.
- Follow all applicable local laws, codes, and regulations.

Typical Uses for the Pro Grader

Road and Surface Maintenance

- Grading gravel roads (maintain crown, smooth washboards, remove potholes).
- Maintain dirt roads and lanes.
- Recondition farm and field roads.
- Spread and level gravel.
- Cut drainage ditches along roads.
- Shape road shoulders.
- Remove snow by windrowing with the blade angled.
- Scrape ice from roads and parking areas.

Construction and Site Preparation

- Perform rough grading of building sites.
- Level pads for barns, sheds, homes, other structures.
- Spread fill dirt or sand.
- Backfill trenches (light-duty applications).
- Perform final grading before landscaping.
- Maintain construction access roads.
- Level parking lots and work areas.
- Shape embankments and slopes.

Property and Landscaping

- Create driveways.
- Maintain rural driveways.
- Shape slopes to improve drainage.
- Build and maintain trails and paths.
- Spread mulch, gravel, or topsoil.

Agriculture and Land Management

- Level fields to improve irrigation efficiency.
- Create and maintain terraces or contours.
- Build and maintain drainage swales.
- Maintain feedlot surfaces.
- Cut shallow irrigation channels.

Water Management

- Build and maintain drainage ditches.
- Shape ponds or lagoons.
- Maintain berms and similar earthworks.
- Direct water runoff away from structures.
- Remove sediment buildup from shallow ditches and waterways.

Seasonal / Weather Uses

- Plow snow in wide areas such as parking lots, lanes, and rural roads.

Specialized / Industrial Uses

- Maintain rural airstrips and landing strips.
- Grade and maintain logging roads.
- Maintain access roads for oilfield, wind farm, or similar facilities.
- Perform light grading along railroad sidings.
- Smooth pipeline rights-of-way.
- Maintain mine and quarry roads (light-duty).

Maintenance

Maintenance Safety

⚠ WARNING

Always follow all safety instructions.

- Before servicing, inspecting, adjusting or lubricating the pro grader, park the tractor and pro grader on firm, level ground in a clean, dry, well-lit area. Lower the blade to the ground, shut off the tractor, and remove the key.
- Ensure the pro grader is fully lowered and firmly resting on the ground or securely supported with approved supports.
- Relieve all hydraulic pressure and stored hydraulic energy.
- Each time you leave the operator's station, engage the parking brake, shut off the engine, remove the key, and ensure the tractor and pro grader are secured against all movement.
- Follow the **Securing and Supporting the Pro Grader for Maintenance** instructions on page 31.
- Never enter the area beneath the pro grader to avoid being crushed.
- Keep the work area clean, dry, and well-lit.
- Keep hands, feet clothing, and all body parts away from pinch points, and moving components.
- Use correct parts or equivalent. Unauthorized parts may void the warranty. Contact the factory if in doubt.

MS-0005

Securing and Supporting the Pro Grader for Maintenance

⚠ WARNING

- Adhere to the following instructions. Never work under this pro grader. Only work on this pro grader when it's securely positioned, blocked, supported, and there's no possible way it could shift, move, or drop down.
- Properly block and support the pro grader before performing maintenance. Ensure the tractor, pro grader, and all components are secured against movement and cannot shift, fall, pinch, or otherwise cause injury or death.
- Always use correct, stable jacks properly rated to support the weight.
- Lift only at approved support points with adequate equipment. Contact Strobel Manufacturing if unsure of proper lifting points.
- Always support the scraper on a firm, solid, level surface that can safely support the weight, away from people, equipment and high winds.

General Blocking and Securing the Pro Grader Procedure

Important
Perform work on the pro grader only on a level, firm surface away from people, equipment, and high winds. Apply extreme caution when servicing or inspecting the pro grader.

1. Lower the blade fully. If the blade must remain raised, support it securely with adequate blocks, stands, or other approved supports.
2. Fully relieve the pro grader hydraulic system pressure.
3. Park the tractor on level ground, shut off the engine, apply the parking brake, verify the tractor cannot move, and remove the key.
4. Turn the hydraulic lock valve fully to the CLOSED position.
5. Chock the pro grader wheels with heavy-duty chocks.
6. Unhitch the tractor and disconnect the pro grader hydraulics and electrical connections.
7. Move the tractor a safe distance away from the pro grader, set the parking brake, verify the tractor can not move, and remove the key.
8. Ensure the pro grader is stable, properly supported, and secured against any movement.
9. Perform the maintenance work.

Supporting the Pro Grader For Wheel and Tire Replacement

Important
Perform this procedure only on a level, firm surface. Keep all persons clear of the work area. Use extreme caution when lifting, supporting, or working around the pro grader.

1. Fully lower the blade to the ground or on adequate blocks and continue to retract the lift cylinder to raise the wheels up off the ground.
2. Turn the hydraulic lock valve fully to the CLOSED position to hold the wheels in the raised position.
3. Verify the pro grader is stable and secured against any movement.
4. Support both pro grader dual wheel mounts with suitable jack stands or only the one being serviced.
    - Adjust each jack as necessary to achieve stable, secure support.
    - Keep the dual wheel mount(s) low to maintain strong support and balance.
    - Open the hydraulic lock valve and carefully lower the dual-wheel mount(s) onto the jack stands. See the following support points illustration.
5. Verify the pro grader is stable, properly supported, and secured against any movement.
6. Again, Turn the hydraulic lock valve fully to the CLOSED position.
7. Move the tractor a safe distance away from the pro grader. Apply the parking brake, verify the tractor cannot move, shut off the engine, and remove the key.
8. Verify the pro grader is stable, properly supported, and secured against movement before starting wheel and tire replacement work.
9. Perform wheel, hub, tire, or maintenance work.

Support Locations

⚠ Place jacks on firm, level ground.

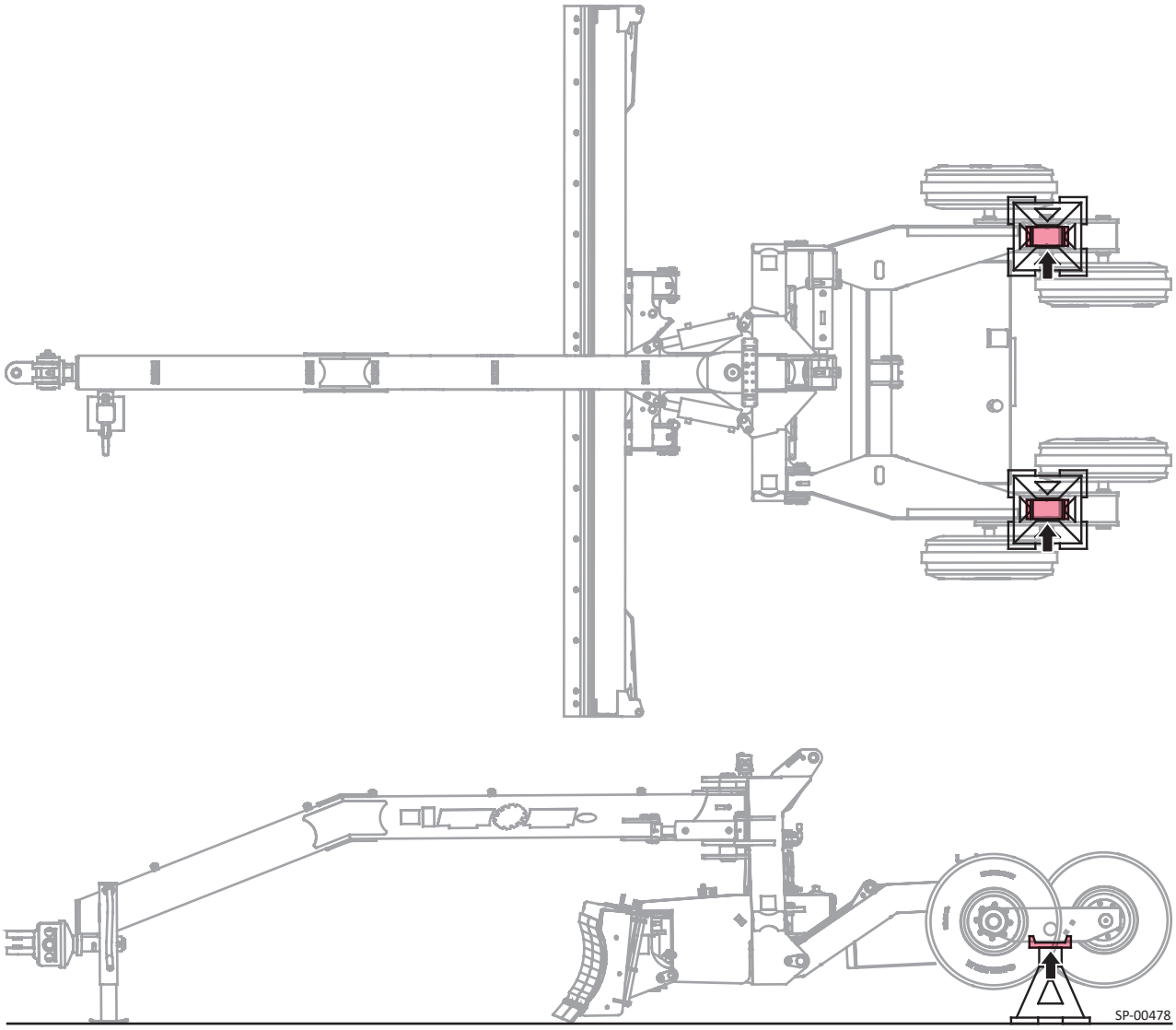

Maintenance Schedule

Maintenance Task	Task Frequency
Check for any missing safety decals or signs	Before each use
Clean the pro grader and protect exposed surfaces	After each use
Inspect the pro grader for damaged, worn, or missing parts, and repair or replace components as needed	Before each use
Lubricate the pro grader	Follow the Lubrication Guide and Schedule
Grease all lubrication (lube) points	Every 8 hours of operation and after extended storage
Check tires/wheels, inflate tires if needed to proper PSI	At least once a week
Repaint exposed metal surfaces to prevent corrosion	Whenever scratches, chips, or rust are present
Check pin bolts at all pivot locations	Whenever there is any visible slack around pins
Check wheel lug nuts for proper torque	Every 8 hours of operation and at the start of each season
Inspect all electrical connections for looseness, damage, or corrosion	Every 50 hours of operation and at the start of each season
Clean the remote transmitter using a damp cloth and mild detergent	Every 80 hours of operation and at the start of each season
Inspect electrical wiring for wear, abrasion, or other damage	Every few weeks and at the start of each season

Lubrication Guide and Schedule

Hitch

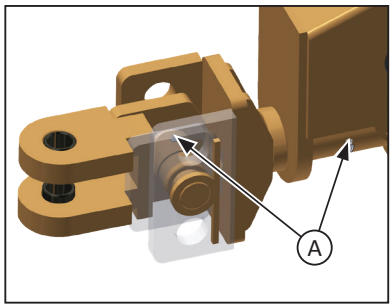

Lube Points	Description	Locations	Frequency
A	Hitch Zerks	1 at Each Pin	Once Every 10 hr
B	Pivot Zerks	2 Right, 2 Left	Once Every 10 hr
C	Swing Cylinder Zerks	2 Right, 2 Left	Once Every 10 hr
D	Blade Pitch Pin (Rotate Blade Fully Fwd)	1 Right, 1 Left	Once Every 10 hr
E	Tilt Cylinder Zerks	1 at Each End	Once Every 10 hr
F	Pitch Cylinder Zerks	2 Right, 2 Left	Once Every 10 hr
G	Angle Cylinder Zerks	2 Right, 2 Left	Once Every 10 hr
H	Weight Box Pivot Pin Zerks	1 Right, 1 Left	Once Every 10 hr
I	Height Cylinder Pin Zerks	1 at Each End	Once Every 10 hr
J	Dual Wheel Mount Zerks (Underneath)	1 Right, 1 Left	Once Every 10 hr
K	Wheel Bearings	2 Inner, 4 Outer	Once Each Season

* Clean fittings and replace as needed. Lubricate all grease fittings using an SAE multi-purpose grease uncontaminated and suitable for your conditions.



SP-00452

As Needed Maintenance

Bolt Torque

Bolt Grade Designation

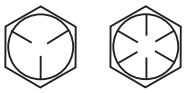

Grade 5 Grade 8

Bolt Diameter	SAE Grade 5		SAE Grade 8	
	ft-lb	Nm	ft-lb	Nm
3/8”	35	47	50	68
7/16”	55	75	80	108
1/2”	85	115	120	163
9/16”	130	176	175	237
5/8”	170	230	240	325
3/4”	300	407	425	576
7/8”	445	603	685	929
1”	670	908	1,030	1,396
1-1/8”	910	1,234	1,460	1,979
1-1/4”	1,250	1,695	2,060	2,793

Clearing Out, Freeing Up Top Manifold Solenoid Valves

If a solenoid valve does not actuate or appears to be stuck, use a small punch to carefully depress the manual override pin located in the hole at the brass end of the valve. This may help clear debris and free the valve for normal operation.

If this doesn’t work, contact your dealer or Strobel Mfg.

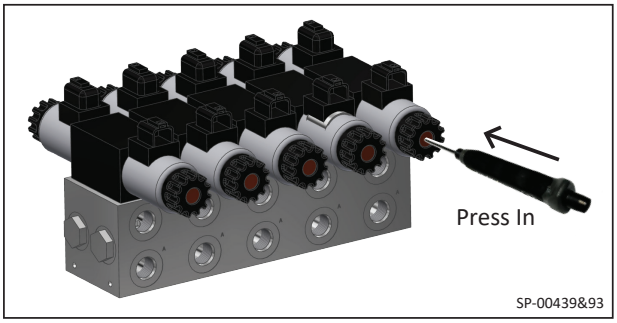

Storing the Pro Grader

Store the pro grader a safe distance away from people and animals. Store it indoors to prevent rust.

Perform the items on this checklist before storing the pro grader:

1. Clean the pro grader removing all dirt and material to prevent rusting.
2. Check the pro grader for any loose, damaged, worn, or missing parts; make repairs and replacements as required.
3. Apply paint to any exposed metal to prevent rusting.
4. Apply grease or rust preventer to all earth moving surfaces that make contact with the material.
5. Set the pro grader on blocks to prevent damage to blades and to prevent tires from developing flat spots corrosion and tire damage.
6. Replace all safety decals, signs, or reflectors that are not in good condition or are no longer easily visble.

Replacements and Parts

Replacement and Parts Safety

⚠ WARNING

Always follow all safety instructions.

- Before servicing, inspecting, adjusting or lubricating the pro grader, park the tractor and pro grader on firm, level ground in a clean, dry, well-lit area. Lower the blade to the ground, shut off the tractor, and remove the key.
- Ensure the pro grader is fully lowered and firmly resting on the ground or securely supported with approved supports.
- Relieve all hydraulic pressure and stored hydraulic energy.
- Each time you leave the operator's station, engage the parking brake, shut off the engine, remove the key, and ensure the tractor and pro grader are secured against all movement.
- Follow the **Securing and Supporting the Pro Grader for Maintenance** instructions on page 31.
- Never enter the area beneath the pro grader to avoid being crushed.
- Keep the work area clean, dry, and well-lit.
- Keep hands, feet clothing, and all body parts away from pinch points, and mvoing components.
- Use correct parts or equivalent. Unauthorized parts may void the warranty. Contact the factory if in doubt.

Replacing Cylinders and Manifolds

Cylinders

- Send cylinders requiring repair to Strobel Manufacturing for rebuilding.
- If cylinders become damaged beyond repair, order replacement cylinders from Strobel Manufacturing.

Hydraulic Manifolds

- Replacement manifolds may be ordered from Strobel Manufacturing.

Replacing a Wheel

Removing a Wheel

1. Park the pro grader on a firm, level surface and ensure it cannot move.
2. Move the tractor a safe distance away from the pro grader.
3. Apply the tractor parking brake, shut off the engine, and remove the key. Ensure the equipment cannot move.
4. Unhitch the tractor from the pro grader.
5. Properly secure and support the pro grader as indicated in **Securing and Supporting the Pro Grader for Maintenance** on page 31.
6. Remove the pro grader wheel assembly. Handle the tire safely without lifting the tire.

Installing a Wheel and Applying Correct Lug Nut Torque

1. Check the parts list and ensure all parts are present. Contact Strobel Manufacturing if any parts are missing.
2. Reuse the original implement lug nuts or obtain equivalent replacements. Replace any lug nut or wheel stud that is damaged or has damaged threads.
3. Clean the wheel and rim of dirt, debris, and grease with an appropriate cleaner.
4. Lift the tire using only safe lifting methods.
5. Align the wheel with the studs and place it on the hub, and install lug nuts onto two of the studs first.
6. Start all lug nuts by hand to prevent cross-threading.
7. Tighten the lug nuts in the sequence shown below and torque each lug nut to the specified torque value using a calibrated torque wrench.

8 Bolt Wheel Lug Nut Tightening Pattern

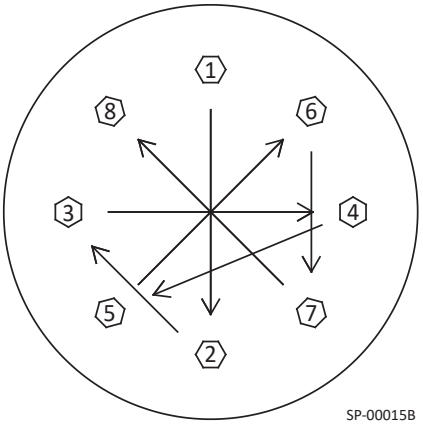

SP-00015B

Lug Nut Recommended Torque Values

Lug Nut Size	Lug Nut Torque Value	
	ft-lb	Nm
1/2”-20	90	122
5/8”-18	135	183

Important

Retorque the wheels every 50 hours of scraper operation.

Replacing the Blades

⚠ WARNING

Never allow anyone or any hands, arms, legs, or feet beneath the grader blade assembly.

Removing the Blades

1. Prepare the pro grader for blade removal. Follow the instructions in the **Securing and Supporting the Pro Grader for Maintenance** section of this manual on page 31.
2. Loosen all blade bolts except the bolts located at each end of the blade.
3. Support the blade securely and remove the blade end bolts.
4. Carefully lower the blade to the ground.

Installing New Blades

1. Safely lift the new blade into position.
2. Support the blade securely and install the blade end bolts.
3. Loosely install the remaining blade bolts and nuts.
4. After all blade bolts and nuts are installed, tighten the bolts to proper torque.

NOTICE

Ensure all persons are clear of the grader before reconnecting it to the hydraulic power source.

Blade Replacement, All Models

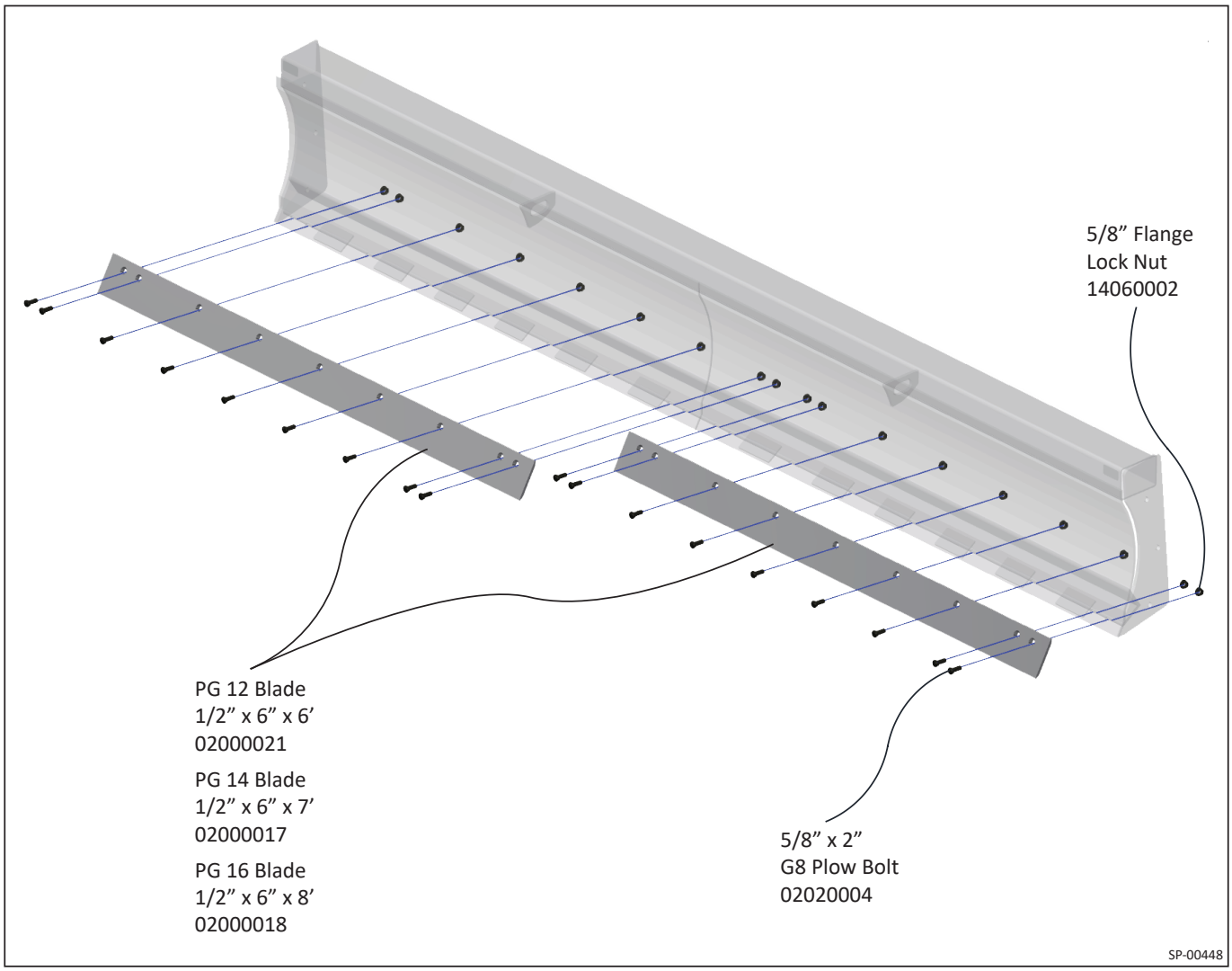

Replacing the Optional Transmitter and Receiver

Replacing the Optional Transmitter and Receiver

- Contact your dealer for optional control system service.
- The transmitter and receiver contain no user-serviceable parts. Return units requiring service.
- RF frequency: 902-928 MHz.
- Receiver power is required for system operation.
- For use on negative-ground electrical systems only.
- Each receiver responds only to its programmed transmitter ID, allowing multiple systems to operate nearby without interference.

Install the receiver vertically with the connectors facing downward. Use shock mounts in high-vibration applications and keep the receiver clear of metal obstructions for best RF performance.

Connect receiver power through a switched, fused 20 A circuit. For best results, connect receiver power to the auxiliary terminal of the ignition switch, PTO switch, or ignition relay.

Properly insulate all electrical connections and seal them to prevent corrosion.

Prevent corrosion. Seal all connections with non-corrosive silicone grease.

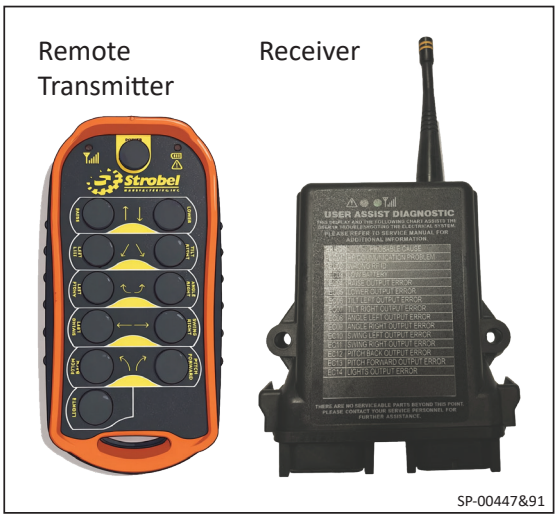

Programming a Replacement Transmitter

1. Turn off the receiver and transmitter.
2. Press and hold the transmitter power button for 10 seconds.
3. Release the button. The LEDs should begin toggling.
4. Apply power to the receiver.
5. Verify the transmitter green LED changes from steady to blinking.

Before Applying Power

- Verify correct power and ground polarity.
- Inspect the wiring harness for shorts or damaged wiring.
- Verify the transmitter battery is fully charged.
- Ensure all persons are clear of the grader before energizing the system.

Pro Grader Replacement Parts

Pro Grader Spindle and Hub Assembly (4 per Pro Grader)

ID	Part Number	Qty	Description
1	03081000	1	Grease Cap
2	16030312	1	5/32” x 2” Cotter Pin
3	14030002	1	7/8” UNF Spindle Nut
4	23192000	1	7/8” Spindle Washer
5	02030013	1	Outer Bearing Cone
6	02030012	1	Outer Bearing Cup
7	14230006	8	5/8”-18 Lug Nut
8	08230001	1	8-Bolt Hub, 4500 lb
9	02030014	1	Inner Bearing Cup
10	02030015	1	Inner Bearing Cone
11	19080403	1	Grease Seal
12	19080619	1	Spindle
13	03050004	1	Spindle Cap
14	23060006	1	3/4” Washer
15	23120006	1	3/4” Lock Washer
16	02080069	1	3/4” x 2” G5 Hex Bolt

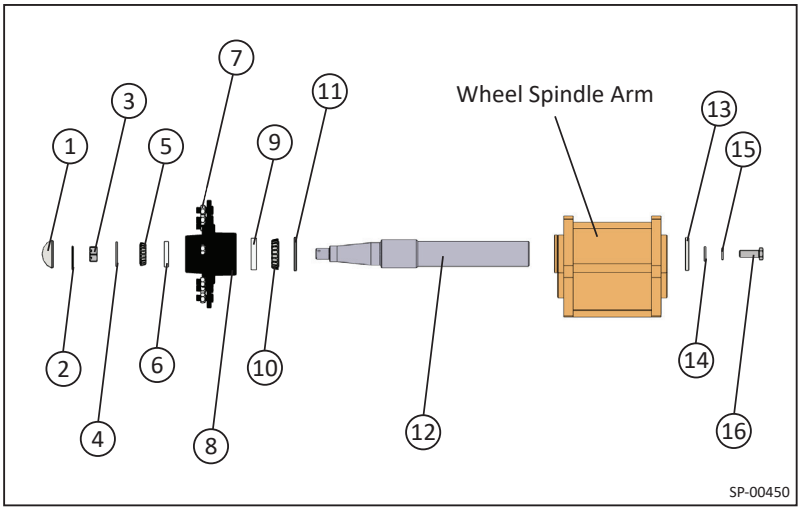

Pro Grader Wheel and Tire Assemblies

ID	Part Number	Qty	Description
1	23038013	1	Pro Grader Wheel and Tire Assembly
2	Contact Factory	1	11L-15 SL 3 Rib Tire
3	Contact Factory	1	15” × 8” Implement Wheel, 8-bolt

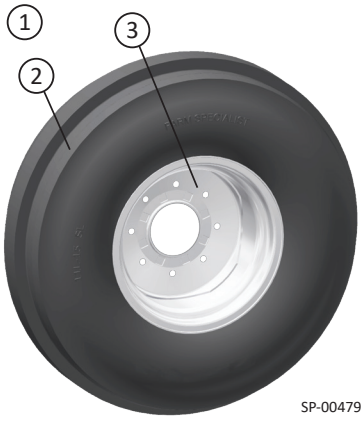

Electro-Hydraulic Model, Tractor to Top Manifold Hydraulics

ID	Part Number	Qty	Description
1	01165000	2	-8 Quick Conn Coupler, 3/4 O-Ring Male
2	08180004O	1	-8 (3/4-16) Hydraulic Handle, Extend
3	08180004I	1	-8 (3/4-16) Hydraulic Handle, Retract
4	08080039	1	268” Long 1/2” ID Hydraulic Hose, 3/4-16 JIC Male, 3/4-16 JIC Female
5	08080040	1	268” Long 1/2” ID Hydraulic Hose, 3/4-16 JIC Male, 3/4-16 JIC Female Elbow

ID	Part Number	Qty	Description
6	06080017	1	90° Elbow, 7/8-14 JIC Male, 7/8-14 O-Ring Male
7	01165000	2	Adapter, 3/4-16 O-Ring Male, 3/4-16 JIC Male
8	23080038	1	Elec Over Hydraulic Top Valve Manifold

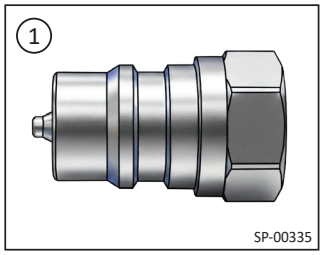

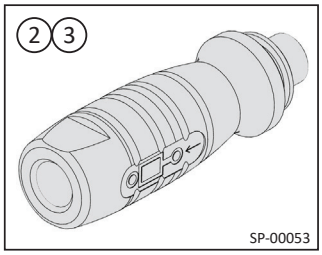

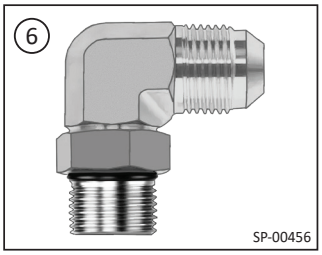

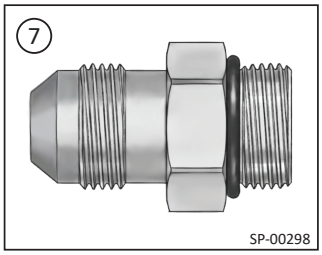

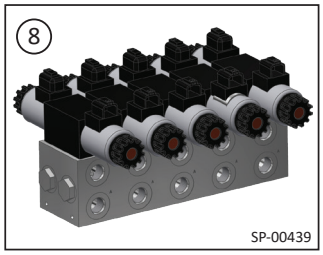

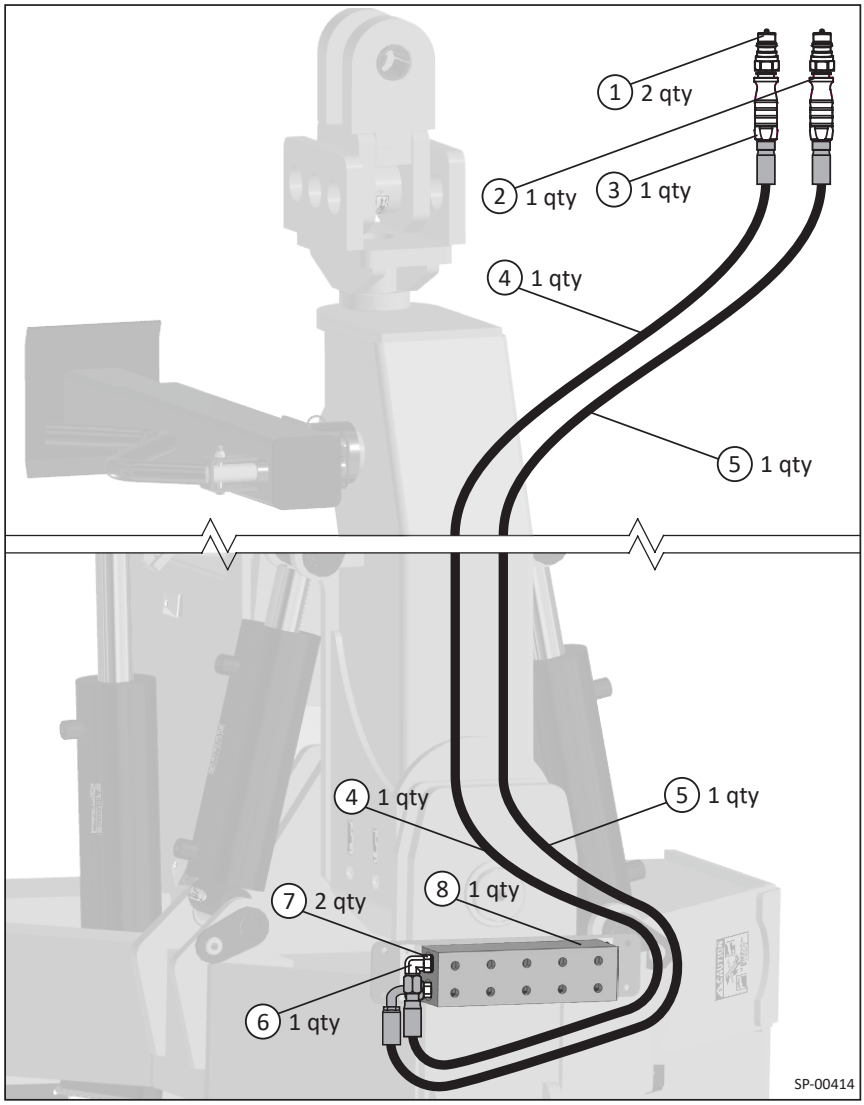

Fully Hydraulic Model, Tractor to Top Manifold Hydraulics

ID	Part Number	Qty	Description
1	01165000	10	-8 Quick Conn Coupler, 3/4 O-Ring Male
2	08180004O	5	-8 (3/4-16) Hydraulic Handle Extend
3	08180004I	5	-8 (3/4-16) Hydraulic Handle Retract
4	08080039	10	268” Long 1/2” ID Hydraulic Hose , 3/4-16 JIC Male, 3/4-16 JIC Female

ID	Part Number	Qty	Description
5	01165000	10	Adapter, 3/4-16 O-Ring Male, 3/4-16 JIC Male
6	13080022	1	2x2x12 Hydr Top Manifold Half, Straight
7	13080021	1	2x2x12 Hydr Top Manifold Half, 90°

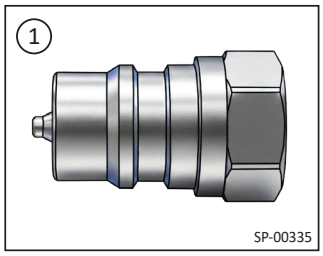

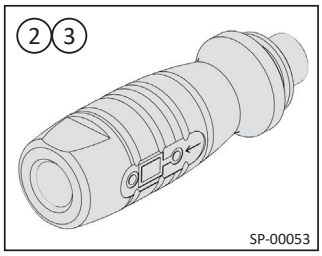

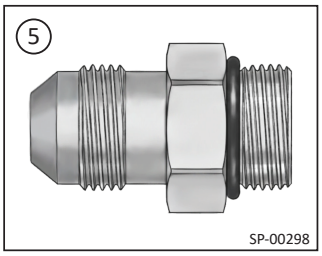

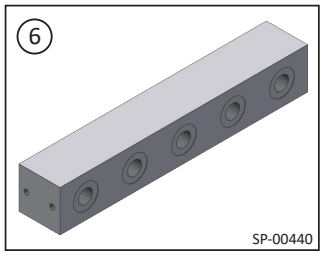

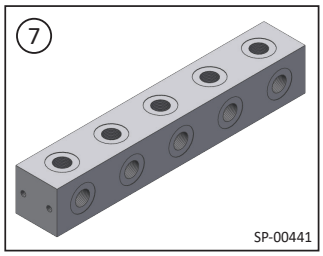

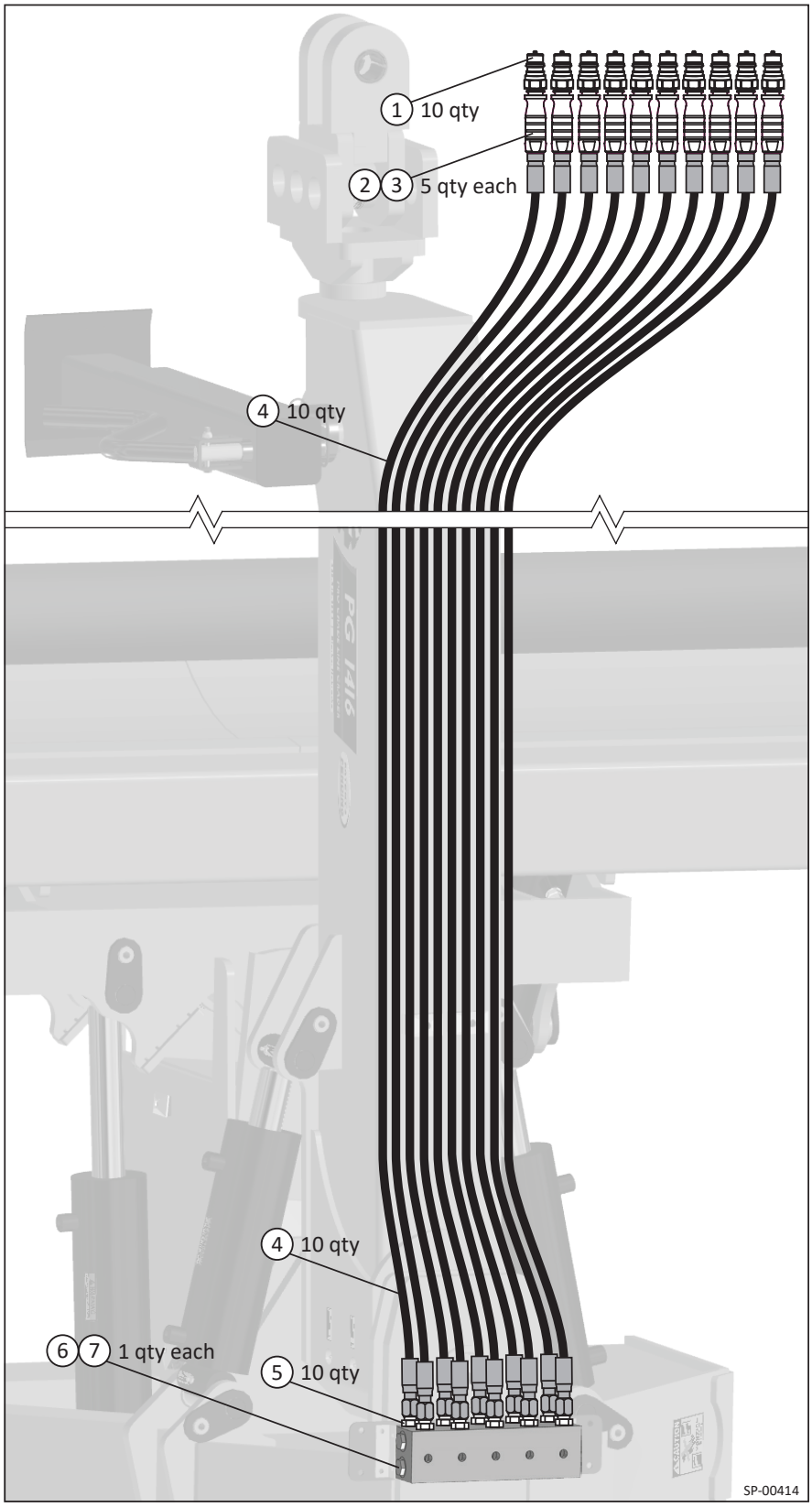
1 10 qty
2 3 5 qty each
4 10 qty
4 10 qty
6 7 1 qty each
5 10 qty
SP-00414

Electro-Hydraulic Model, Top Manifold to Height and Tilt Cylinders Hydraulics

ID	Part Number	Qty	Description
1	Contact Factory	1	Height Cylinder Hoses Kevlar Sleeve
2	06080119	1	45° Elbow, 3/4-16 JIC Male, 3/4-16 O-Ring Male
3	22080004	1	Flow-Control Valve
4	08080047	1	1/2” ID Hydraulic Short Hose, 3/4-16 JIC Female, 3/4-16 JIC Female Elbow
5	01165000	8	Adapter, 3/4-16 O-Ring Male, 3/4-16 JIC Male
6	23080038	1	Elec Over Hydraulic Top Valve Manifold

ID	Part Number	Qty	Description
7	08080048	1	1/2” ID Hydraulic Long Hose, 3/4-16 JIC Female, 3/4-16 JIC Female Elbow
8	Contact Factory	1	Tilt Cylinder Hoses Kevlar Sleeve
9	08080042	1	1/2” ID Hyd Short Hose, 3/4-16 JIC Female, 3/4-16 JIC 90° Female Elbow, 47”
10	08080041	1	1/2” ID Hyd Short Hose, 3/4-16 JIC Female, 3/4-16 JIC 45° Female Elbow, 39”
11	03000089	1	5” x 24” Height Cylinder
12	03000084	1	4” x 8” Tilt Cylinder

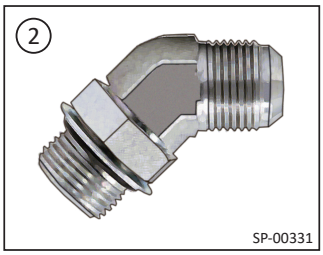

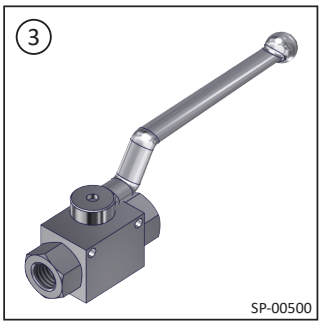

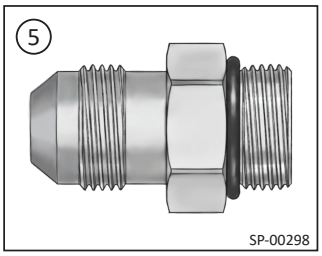

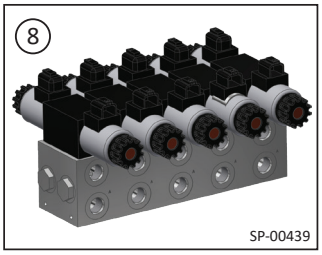

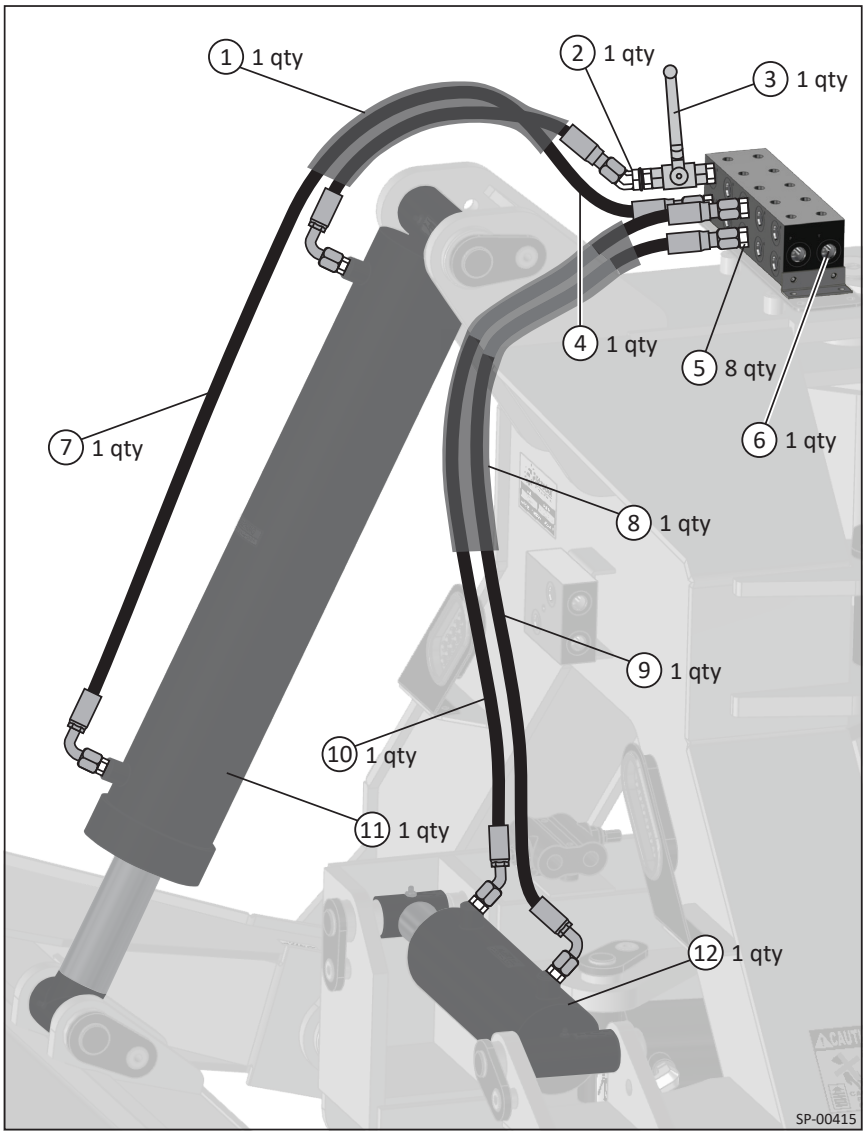

Fully Hydraulic Model, Top Manifold to Height and Tilt Cylinders Hydraulics

ID	Part Number	Qty	Description
1	Contact Factory	1	Height Cylinder Hoses Kevlar Sleeve
2	22080004	1	Flow-Control Valve
3	06080004	2	90° Elbow, 3/4-16 JIC Male, 3/4-16 O-Ring Male
4	Contact Factory	1	1/2” ID Hydraulic Short Hose, 3/4-16 JIC Female, 3/4-16 JIC Female Elbow

ID	Part Number	Qty	Description
5	01165000	7	Adapter, 3/4-16 O-Ring Male, 3/4-16 JIC Male
6	13080022	1	2x2x12 Hydr Top Manifold Half, Straight
7	13080021	1	2x2x12 Hydr Top Manifold Half, 90°
8	Contact Factory	1	1/2” ID Hydraulic Long Hose, 3/4-16 JIC Female, 3/4-16 JIC Female Elbow
9	Contact Factory	1	Tilt Cylinder Hoses Kevlar Sleeve
10	08080042	1	1/2” ID Hyd Short Hose, 3/4-16 JIC Female, 3/4-16 JIC 90° Female Elbow, 47”
11	08080041	1	1/2” ID Hyd Short Hose, 3/4-16 JIC Female, 3/4-16 JIC 45° Female Elbow, 39”
12	03000089	1	5” x 24” Height Cylinder
13	03000084	1	4” x 8” Tilt Cylinder

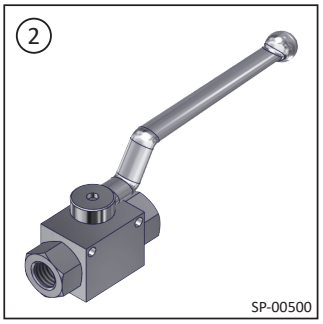

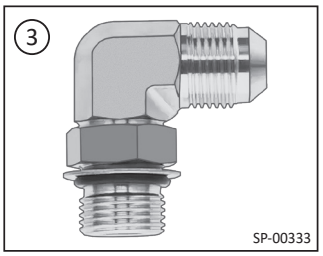

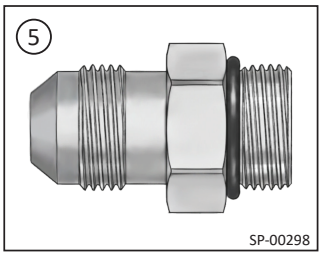

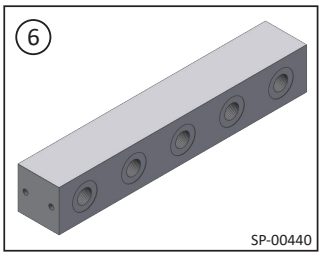

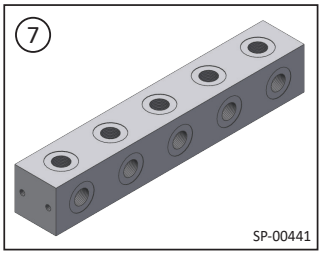

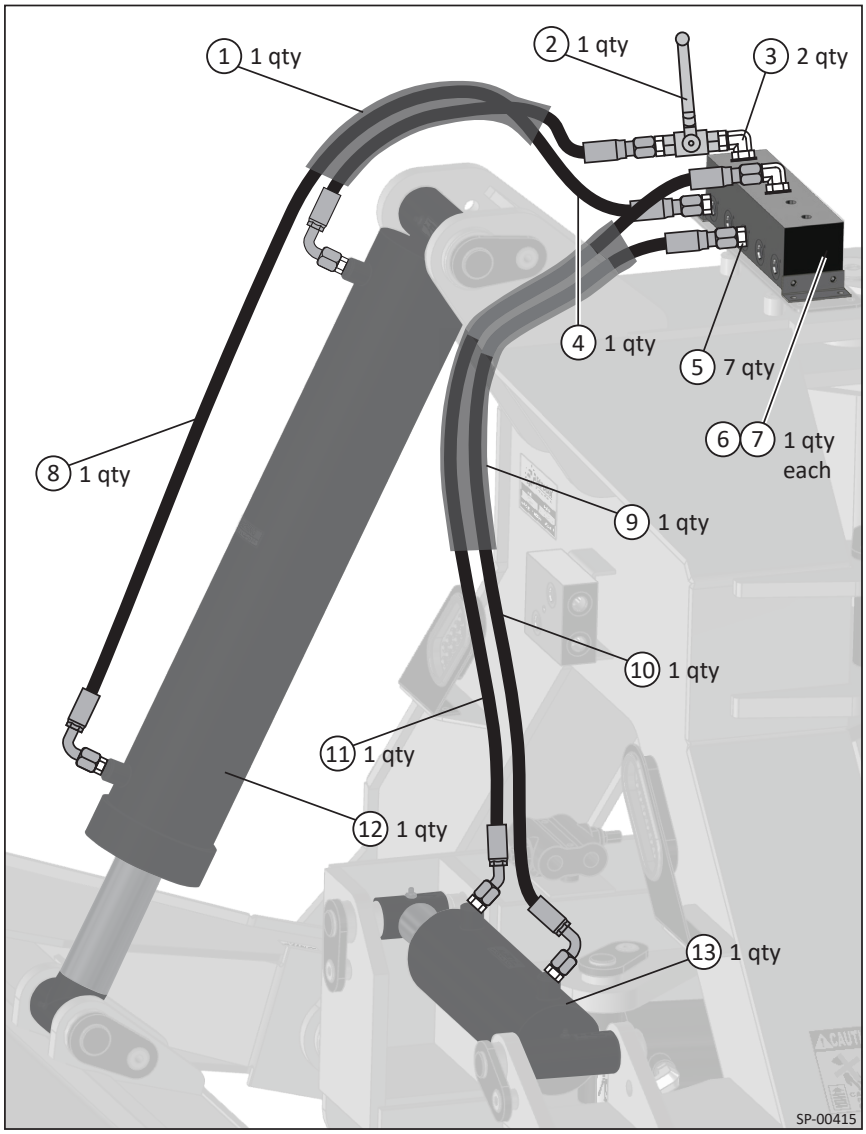

Electro-Hydraulic Model, Top Manifold to Swing Cylinders Hydraulics

ID	Part Number	Qty	Description
1	03000084	2	4” x 8” Swing Cylinder
2	06080004	4	90° Elbow, 3/4-16 JIC Male, 3/4-16 O-Ring Male
3	23080038	1	Elec Over Hydraulic Top Valve Manifold
4	01165000	8	Adapter, 3/4-16 O-Ring Male, 3/4-16 JIC Male
5	08080058	2	1/2” ID Hydraulic Long Hose, 3/4-16 JIC Female, 3/4-16 JIC 45° Female Elbow, 40.5”
6	08080045	1	1/2” ID Hydraulic Short Hose, 3/4-16 JIC Female, 3/4-16 JIC 90° Female Elbow, 23”

ID	Part Number	Qty	Description
7	08080044	1	1/2” ID Hydraulic Short Hose, 3/4-16 JIC Female, 3/4-16 JIC 90° Female Elbow, 25”
8	08080057	2	1/2” ID Hydraulic Short Hose, 3/4-16 JIC Female, 3/4-16 JIC 45° Female Elbow, 32”
9	Contact Factory	1	4 Port Manifold Hoses Sleeve
10	Contact Factory	2	Swing Cylinder Hoses Sleeve
11	13080011	1	4 Port A-Frame Hydraulic Manifold

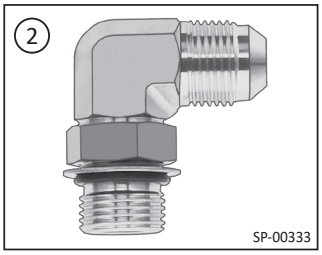

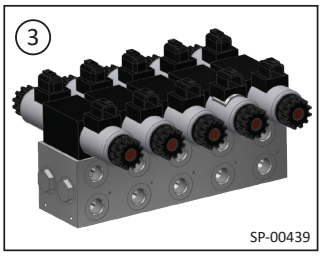

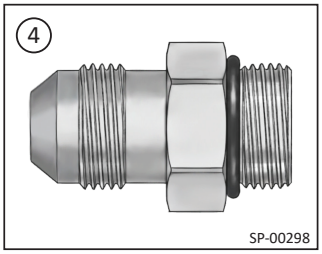

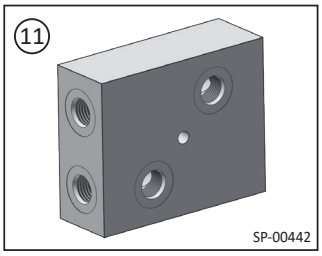

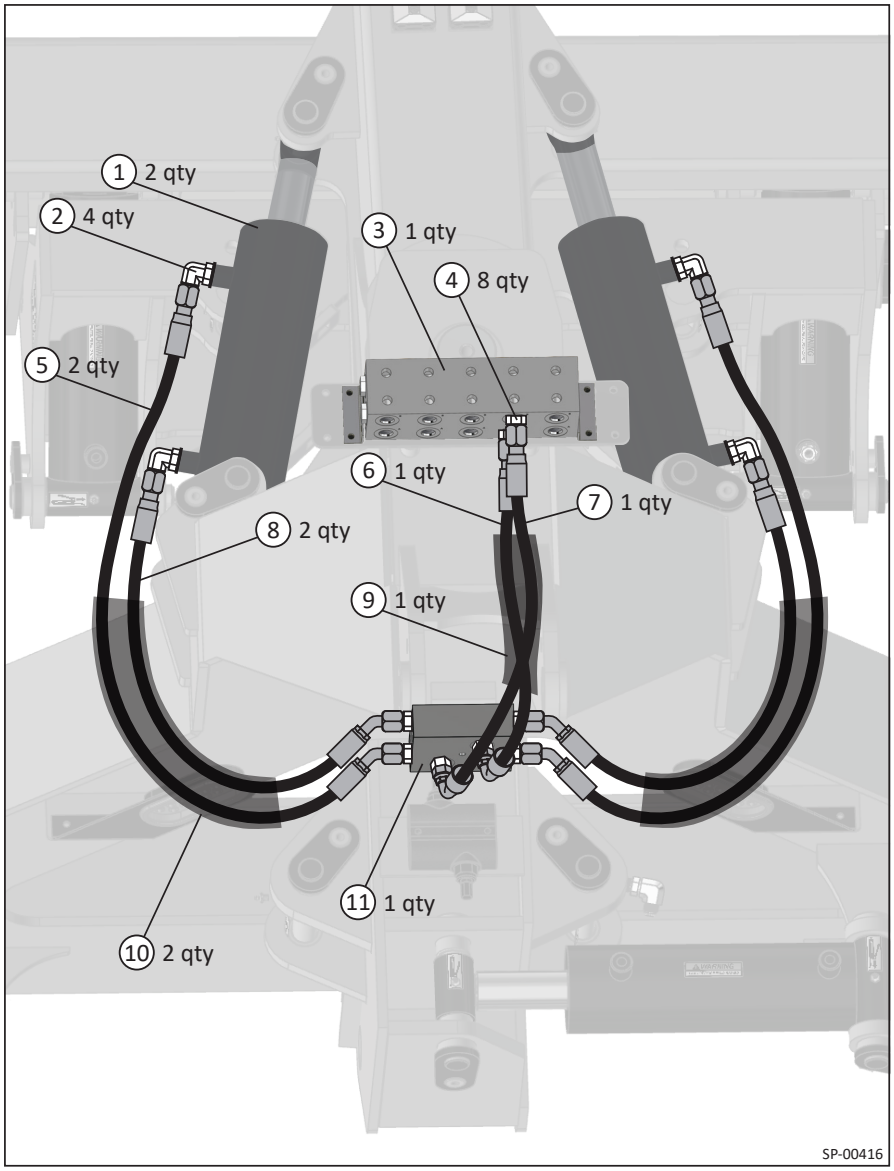

Fully Hydraulic Model, Top Manifold to Swing Cylinders Hydraulics

ID	Part Number	Qty	Description
1	03000084	2	4” x 8” Swing Cylinder
2	06080004	5	90° Elbow, 3/4-16 JIC Male, 3/4-16 O-Ring Male
3	13080022	1	2x2x12 Hydr Top Manifold Half, Straight
4	13080021	1	2x2x12 Hydr Top Manifold Half, 90°
5	Contact Factory	2	1/2” ID Hydraulic Long Hose, 3/4-16 JIC Female, 3/4-16 JIC 45° Female Elbow
6	01165000	7	Adapter, 3/4-16 O-Ring Male, 3/4-16 JIC Male

ID	Part Number	Qty	Description
7	08080045	1	1/2” ID Hydraulic Short Hose, 3/4-16 JIC Female, 3/4-16 JIC 90° Female Elbow, 23”
8	08080044	1	1/2” ID Hydraulic Short Hose, 3/4-16 JIC Female, 3/4-16 JIC 90° Female Elbow, 25”
9	Contact Factory	2	1/2” ID Hydraulic Short Hose, 3/4-16 JIC Female, 3/4-16 JIC 45° Female Elbow
10	Contact Factory	1	4 Port Manifold Hoses Sleeve
11	Contact Factory	2	Swing Cylinder Hoses Sleeve
12	13080011	1	4 Port A-Frame Hydr Manifold

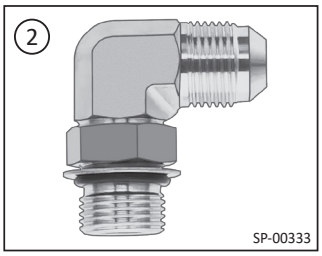

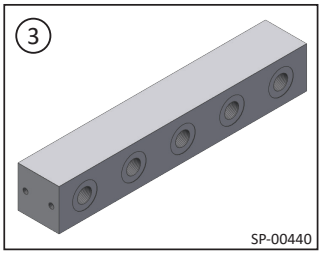

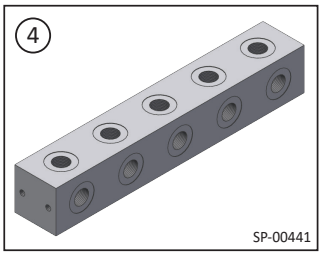

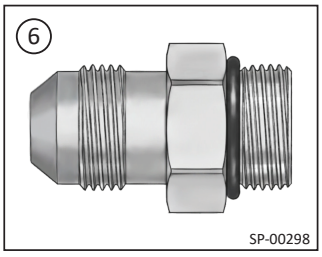

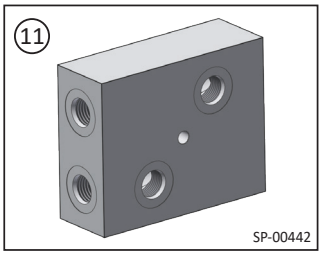

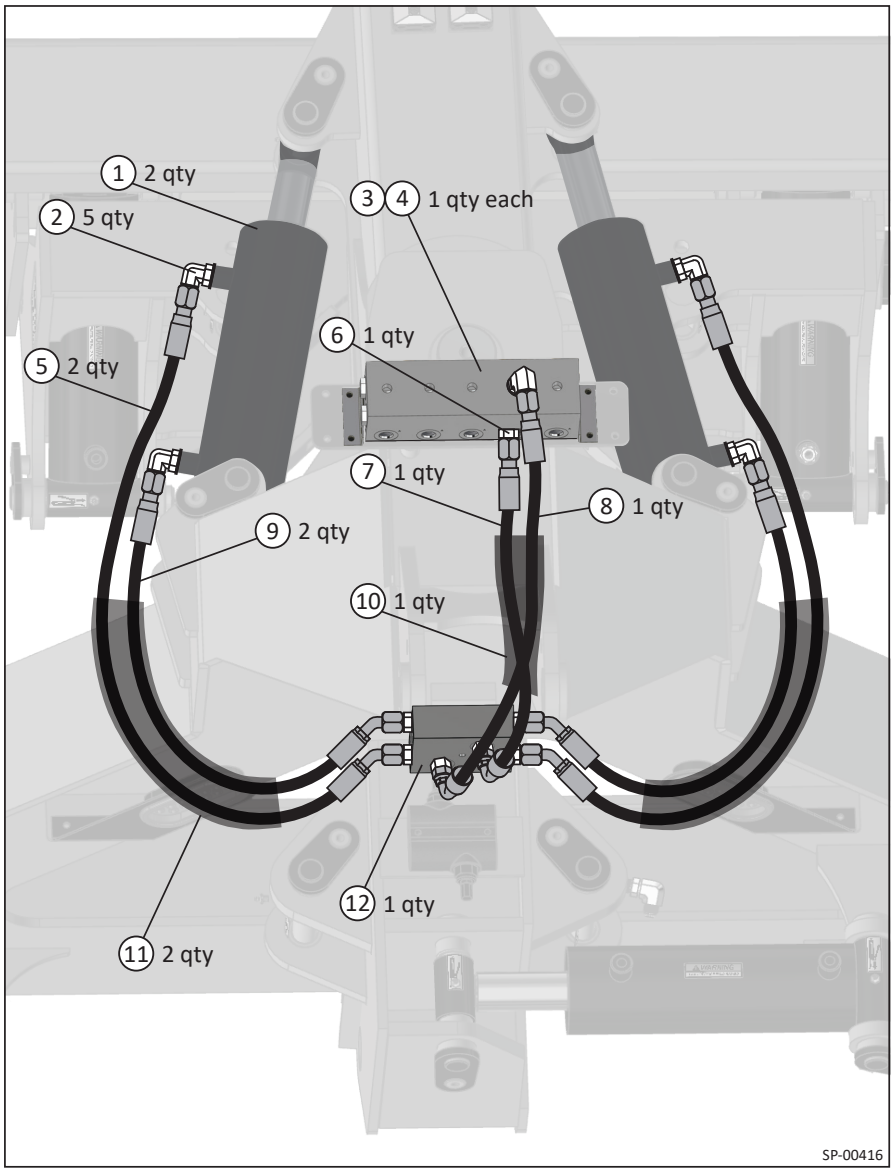

Electro-Hydraulic Model, Top Manifold to Valve Manifold Hydraulics

ID	Part Number	Qty	Description
1	23080038	1	Elec Over Hydraulic Top Valve Manifold
2	01165000	2	Adapter, 3/4-16 O-Ring Male, 3/4-16 JIC Male
3	Contact Factory	1	Black Valve Hoses Sleeve

ID	Part Number	Qty	Description
4	Contact Factory	2	1/2” ID Hydraulic Valve Hose, 3/4-16 JIC Female, 3/4-16 JIC 90° Female Elbow
5	22180000	1	Black Flow-Control Valve

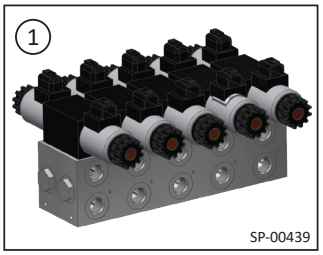

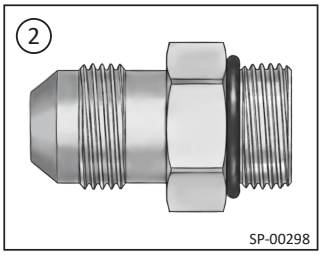

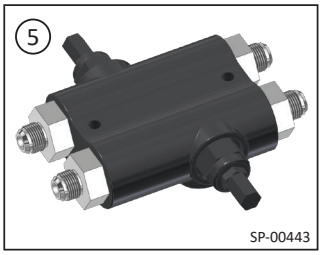

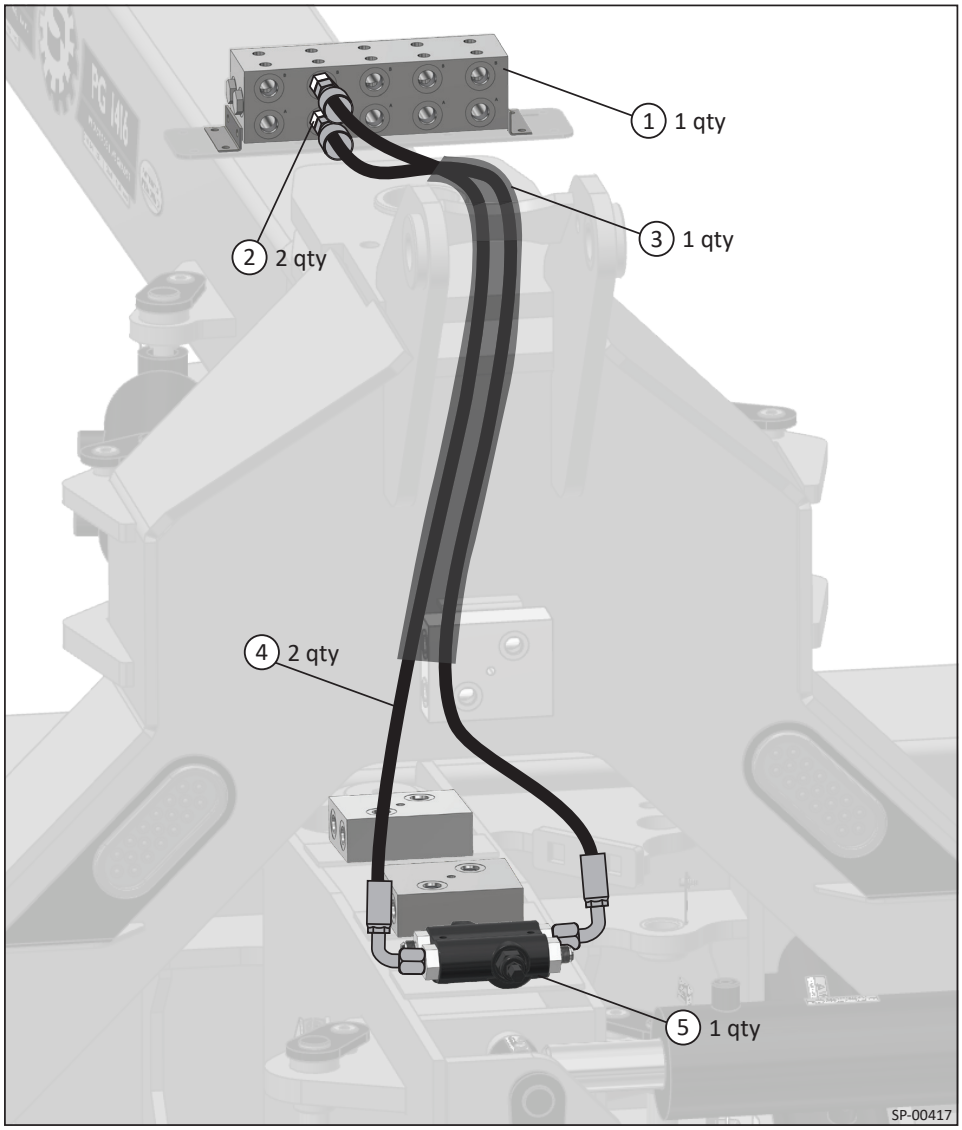

Fully Hydraulic Model, Top Manifold to Valve Manifold Hydraulics

ID	Part Number	Qty	Description
1	06080004	1	90° Elbow, 3/4-16 JIC Male, 3/4-16 O-Ring Male
2	13080022	1	2x2x12 Hydr Top Manifold Half, Straight
3	13080021	1	2x2x12 Hydr Top Manifold Half, 90°
4	01165000	1	Adapter, 3/4-16 O-Ring Male, 3/4-16 JIC Male

ID	Part Number	Qty	Description
5	Contact Factory	1	Black Valve Hoses Sleeve
6	08080046	2	1/2” ID Hydraulic Valve Hose, 3/4-16 JIC Female, 3/4-16 JIC 90° Female Elbow, 57”
7	22180000	1	Black Flow-Control Valve

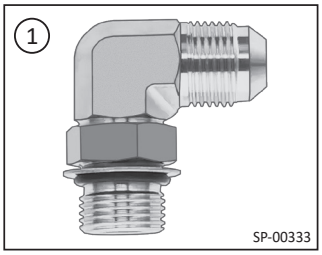

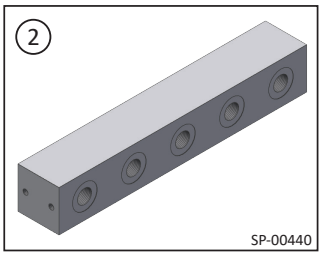

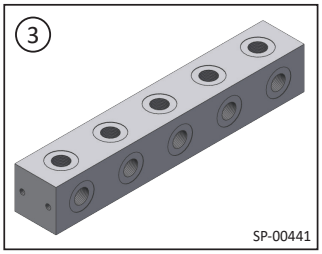

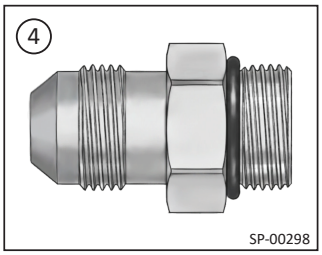

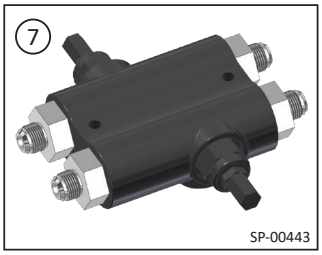

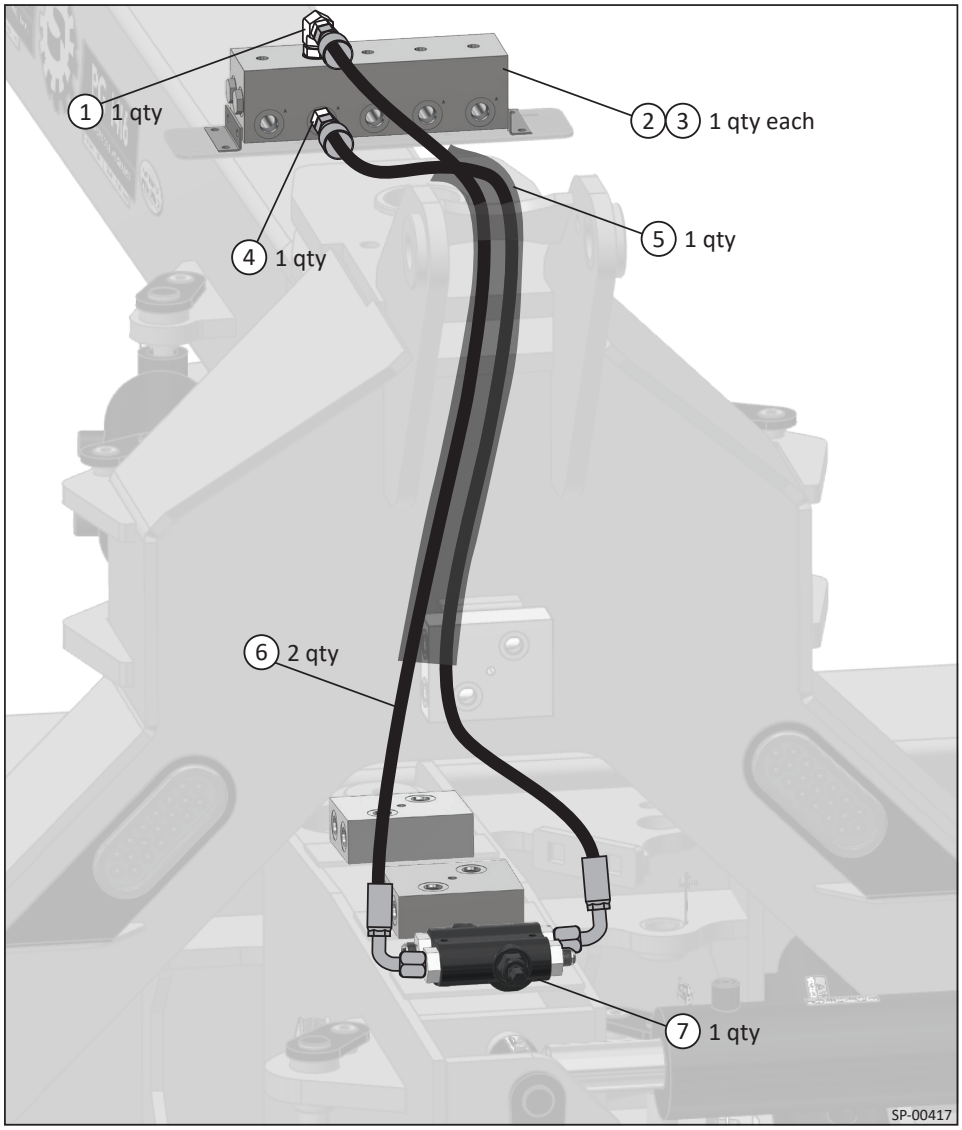

Electro-Hydraulic Model, Top Manifold to Middle Manifold Hydraulics

ID	Part Number	Qty	Description
1	23080038	1	Elec Over Hydraulic Top Valve Manifold
2	01165000	2	Adapter, 3/4-16 O-Ring Male, 3/4-16 JIC Male
3	Contact Factory	1	Angle Cylinder Manifold Hoses Sleeve

ID	Part Number	Qty	Description
4	08080043	2	1/2” ID Valve Hose, 3/4-16 JIC Female, 3/4-16 JIC 90° Female Elbow, 39”
5	13080011	1	Angle Cylinder 4-Port Manifold

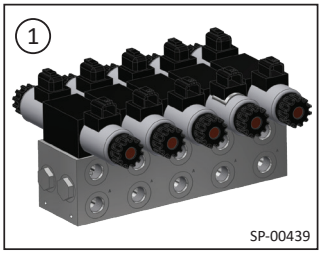

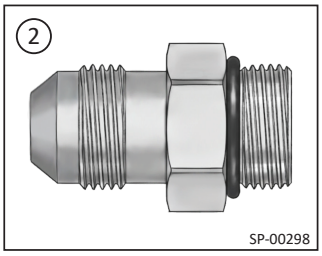

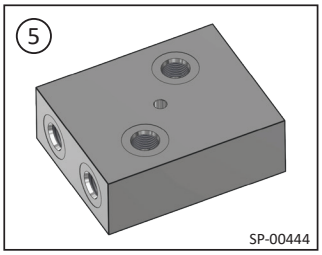

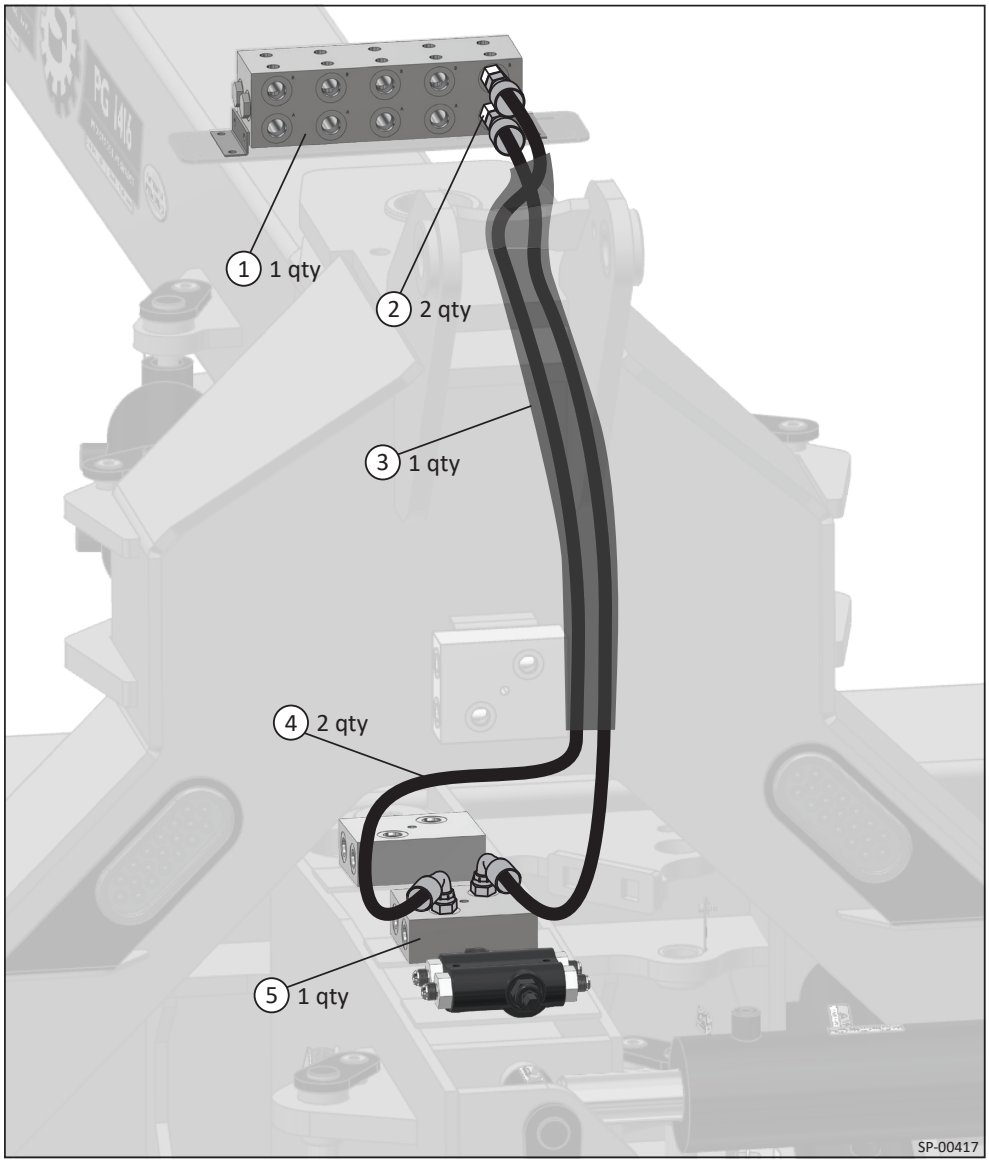

Fully Hydraulic Model, Top Manifold to Middle Manifold Hydraulics

ID	Part Number	Qty	Description
1	13080022	1	2x2x12 Hydr Top Manifold Half, Straight
2	13080021	1	2x2x12 Hydr Top Manifold Half, 90°
3	01165000	2	Adapter, 3/4-16 O-Ring Male, 3/4-16 JIC Male

ID	Part Number	Qty	Description
4	Contact Factory	1	Angle Cylinders Manifold Hoses Sleeve
5	Contact Factory	2	1/2” ID Valve Hose, 3/4-16 JIC Female, 3/4-16 JIC 90° Female Elbow
6	13080011	1	Angle Cylinder 4-Port Manifold

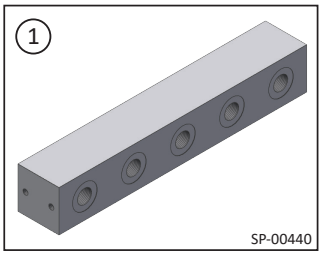

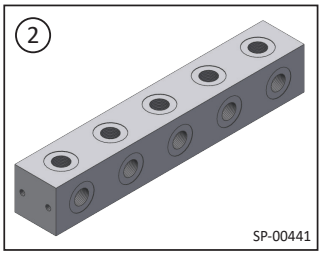

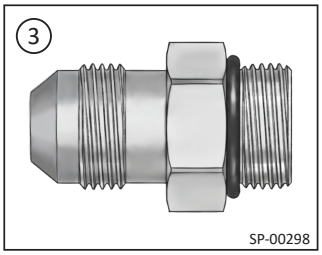

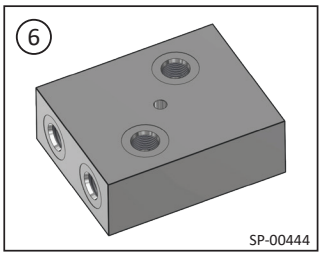

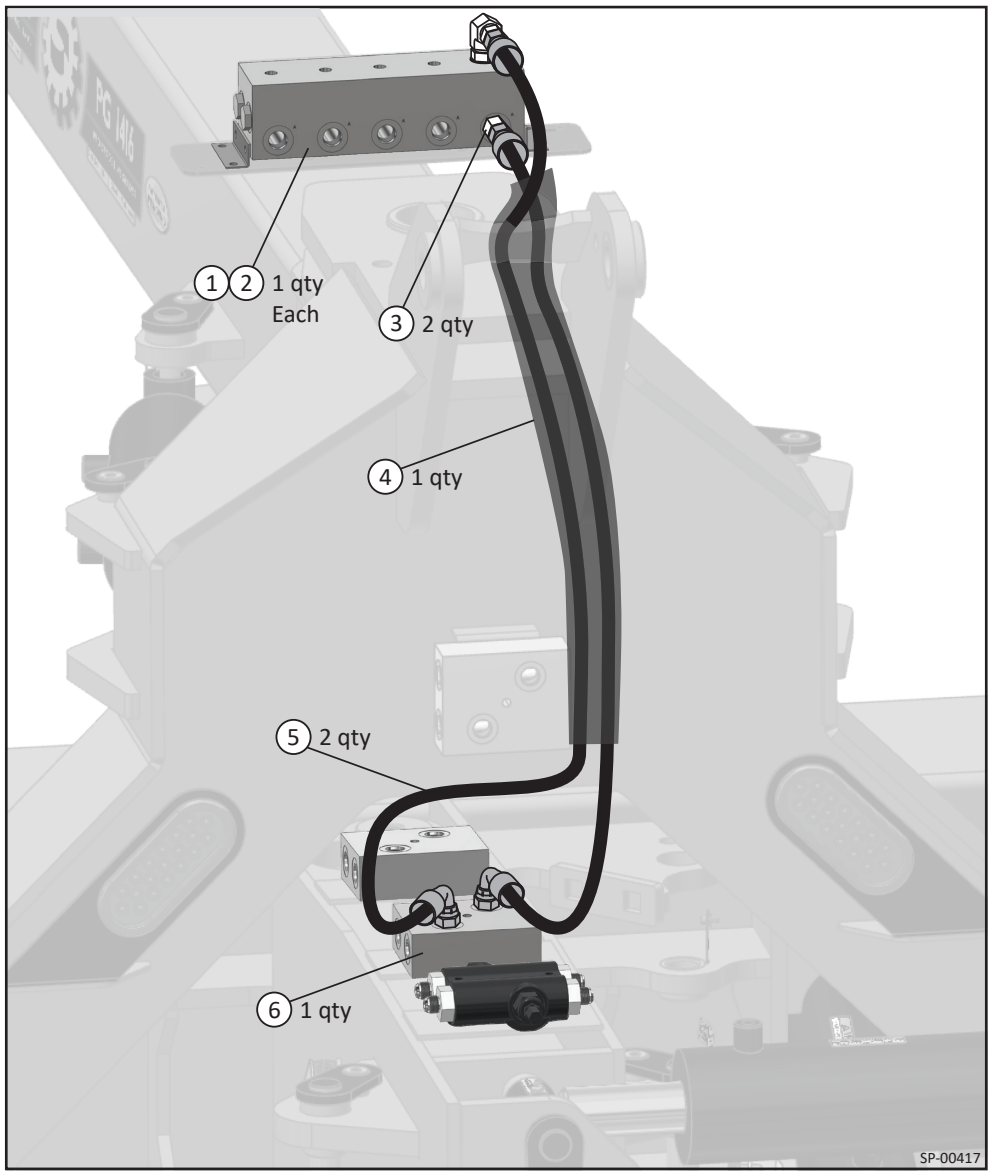

All Models, Yoke Manifolds and Relief Valve Hydraulics

ID	Part Number	Qty	Description
1	08080049	1	1/2” ID Valve Hose, 3/4-16 JIC 90° Female Elbow Long-Drop, 3/4-16 JIC 90° Female Elbow, 18”
2	13080011	1	Pitch Cylinder 4-Port Manifold
3	01165000	2	Adapter, 3/4-16 O-Ring Male, 3/4-16 JIC Male

ID	Part Number	Qty	Description
4	Contact Factory	1	Black Valve
5	08080050	1	1/2” ID Valve Hose, 3/4-16 JIC 90° Female Elbow Long-Drop, 3/4-16 JIC 90° Female Elbow, 15”

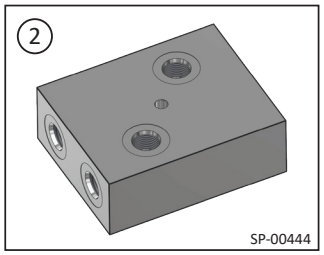

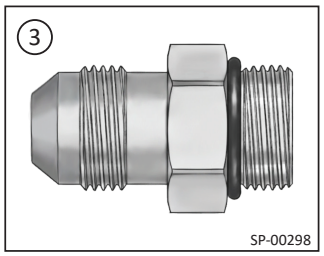

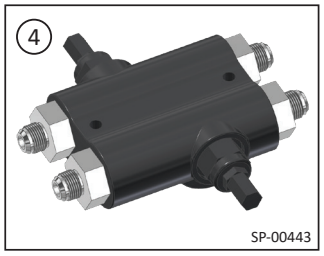

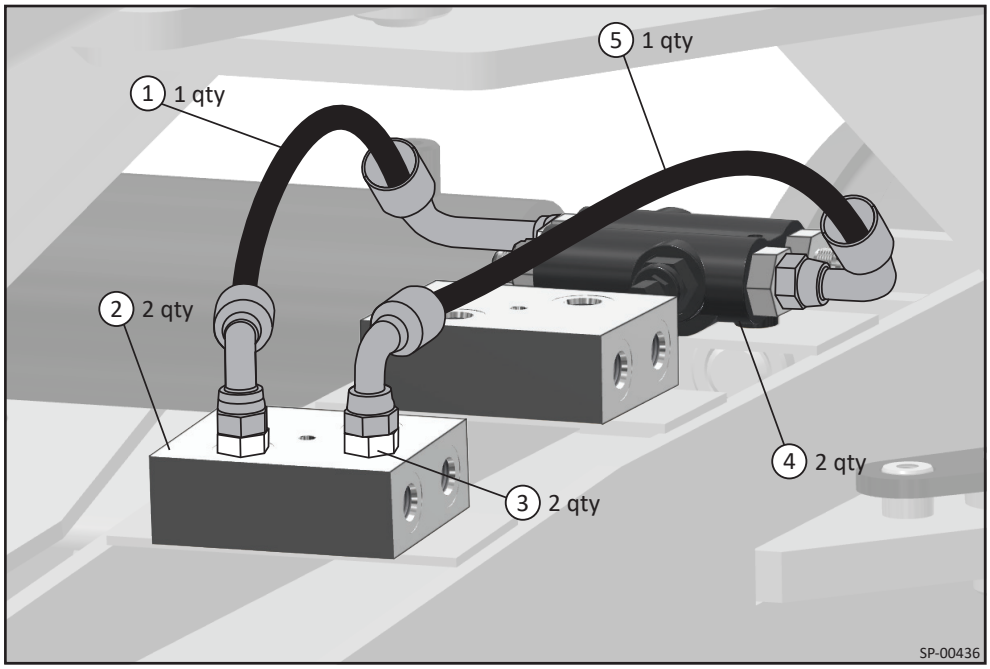

All Models, Yoke Front Manifold to Angle Cylinders Hydraulics

ID	Part Number	Qty	Description
1	06080004	4	90° Elbow, 3/4-16 JIC Male, 3/4-16 O-Ring Male
2	03000090	2	4” x 16” Angle Cylinder
3	13080011	1	Angle Cylinder 4-Port Manifold
4	01165000	4	Adapter, 3/4-16 O-Ring Male, 3/4-16 JIC Male

ID	Part Number	Qty	Description
5	08080051	2	1/2” ID Long Hose, 3/4-16 JIC Female, 3/4-16 JIC 90° Female Elbow, 55”
6	08080054	2	1/2” ID Hose, 3/4-16 JIC Female, 3/4-16 JIC 90° Female Elbow Long-Drop, 36”
7	Contact Factory	2	Angle Cylinder Hose Sleeve

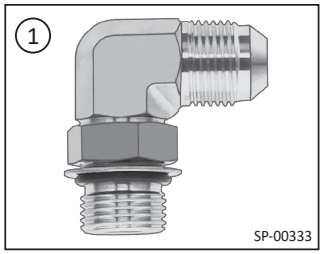

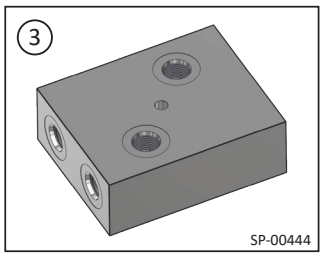

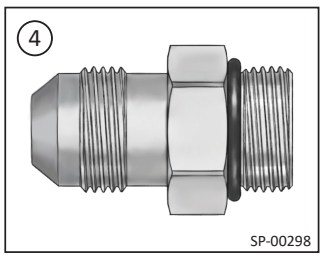

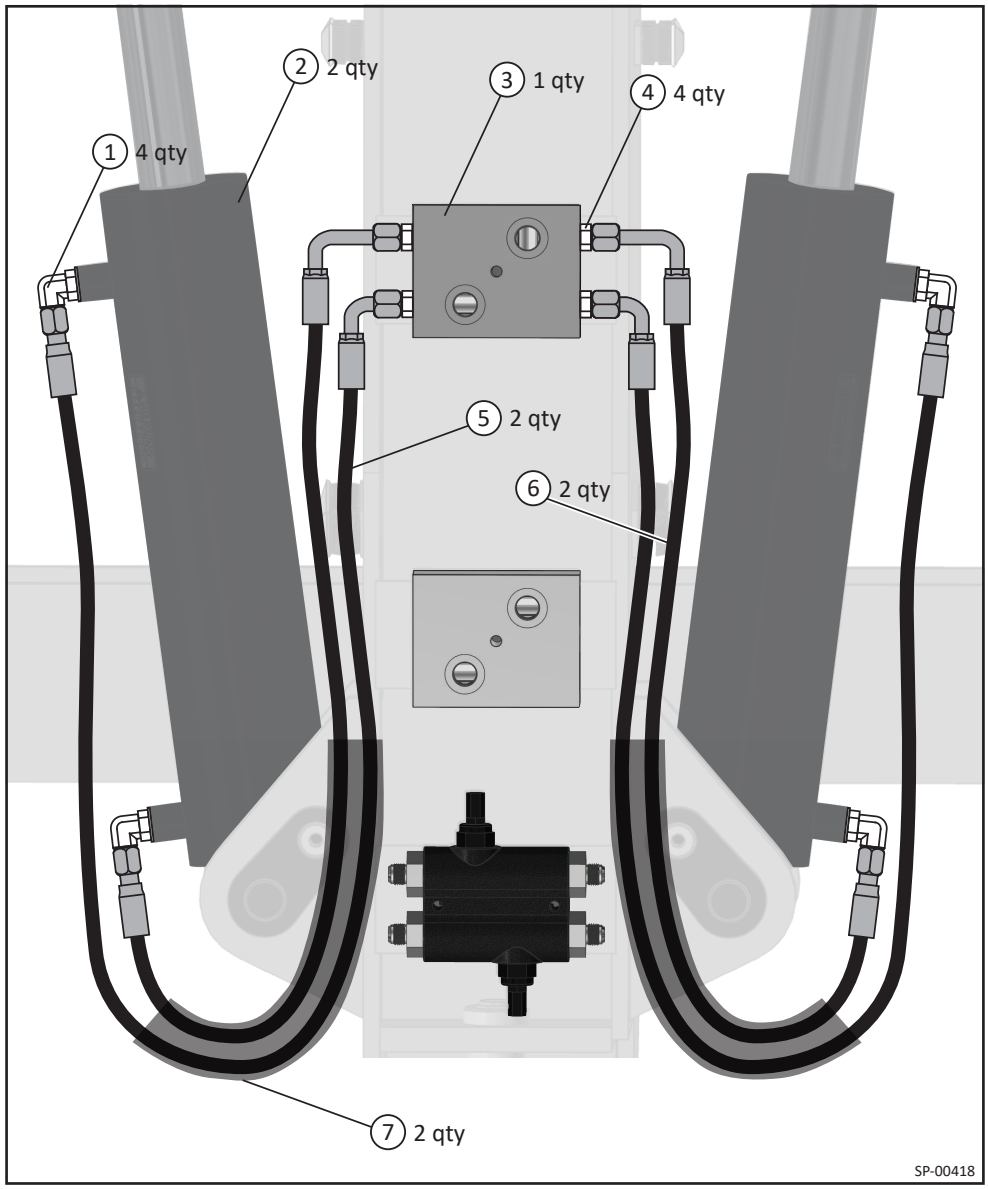

All Models, Yoke Middle Manifold to Pitch Cylinders Hydraulics

ID	Part Number	Qty	Description
1	13080011	1	Pitch Cylinder 4-Port Manifold
2	01165000	4	Adapter, 3/4-16 O-Ring Male, 3/4-16 JIC Male
3	08080056	2	1/2” ID Longer Hose, 3/4-16 JIC Female, 3/4-16 JIC 90° Female Elbow, 52”
4	08080055	2	1/2” ID Shorter Hose, 3/4-16 JIC Female, 3/4-16 JIC 90° Female Elbow, 43”

ID	Part Number	Qty	Description
5	Contact Factory	2	Pitch Cylinder Hose Sleeve
6	06080004	4	90° Elbow, 3/4-16 JIC Male, 3/4-16 O-Ring Male
7	03000086	2	3” x 8” Pitch Cylinder

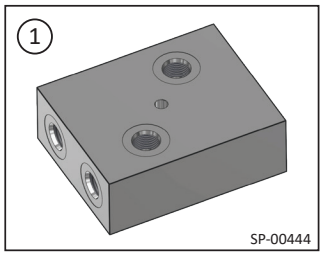

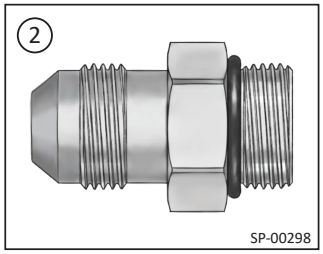

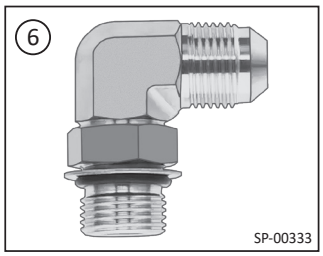

Right Side View

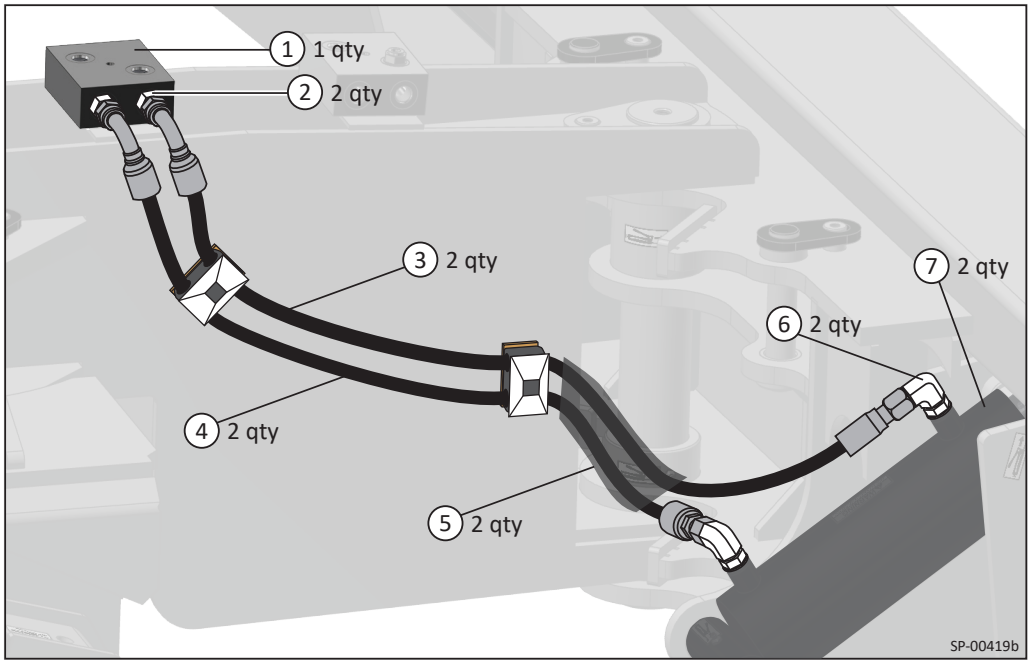

Left Side View

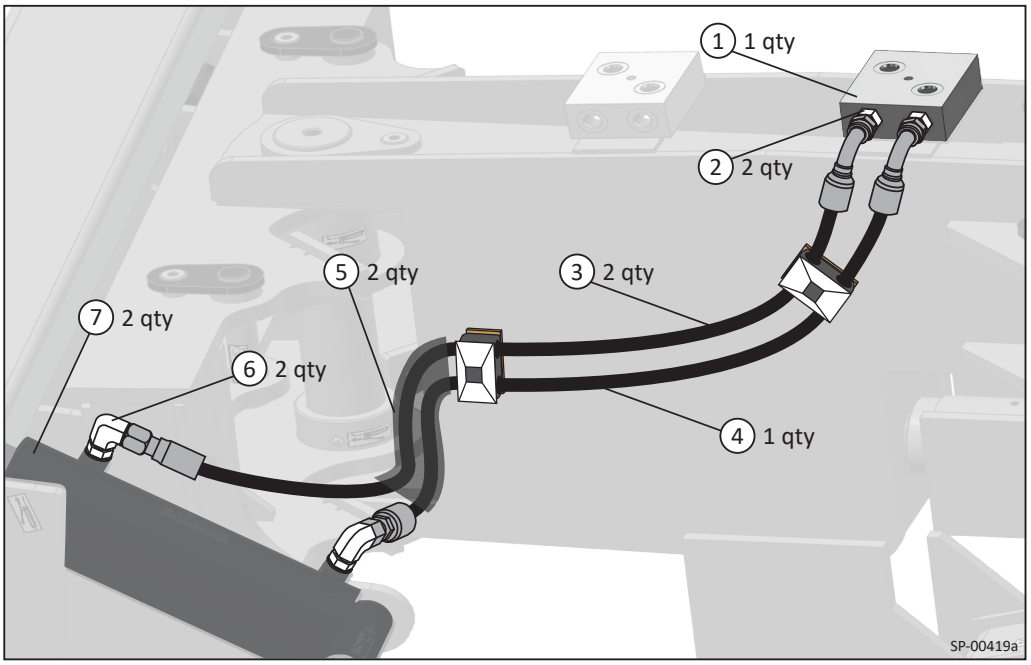

Swivel Hitch Assembly, Pro Graders

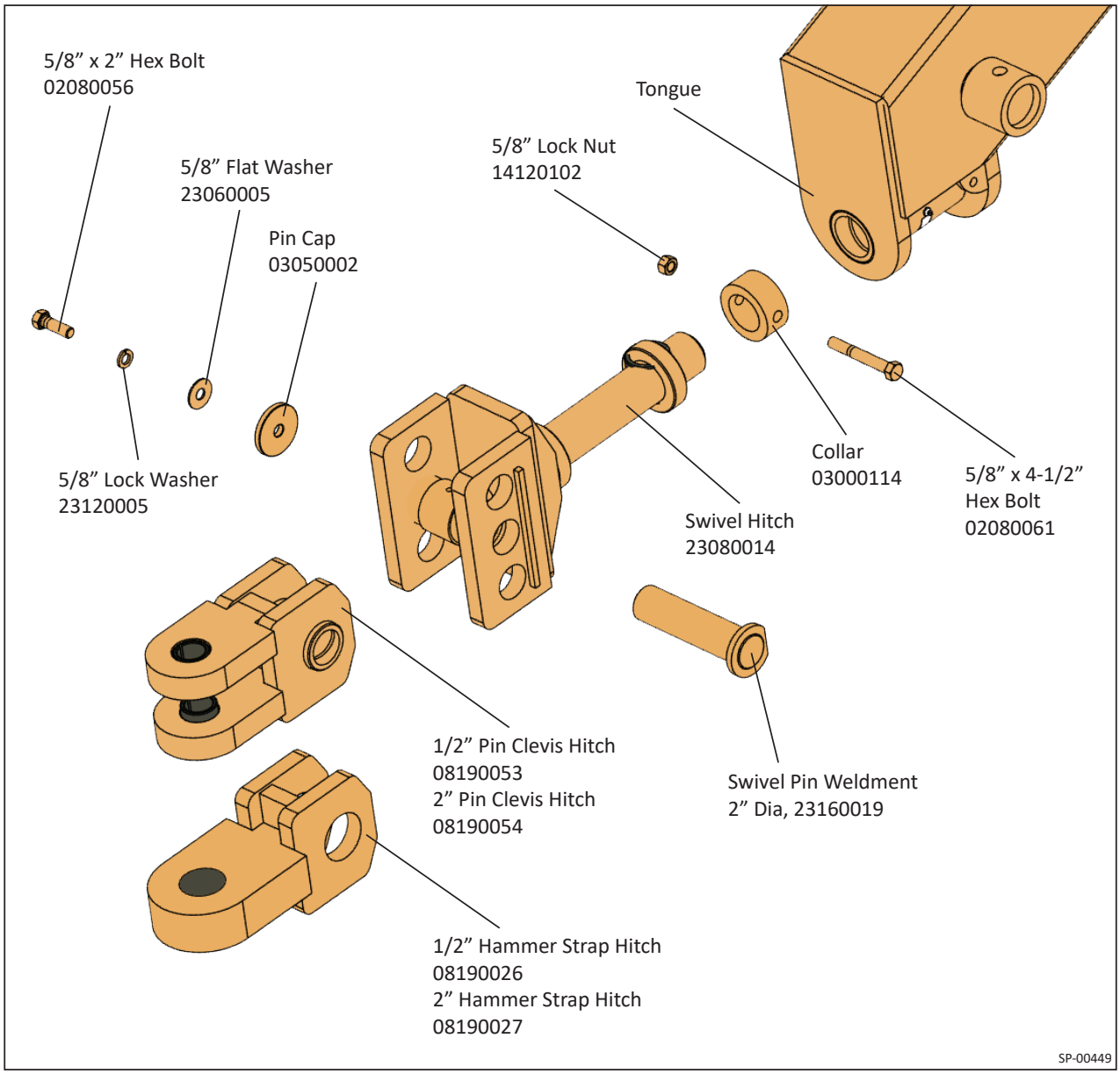

Troubleshooting

Pro Grader Troubleshooting

Trouble	Problem	Cause / Solution
A cylinder creeps and/or doesn't stay in position.	Seals are leaking internally.	Remove and replace the seal kit.
Cylinder hydraulic fluid leak(s).	Worn or damaged rod seal, bushings, cylinder components, or inadequate cylinder lubrication.	Repair or rebuild the cylinder, contact Strobel Manufacturing for cylinder rebuilding service, or install a replacement cylinder.
Cylinder movement is improper, jerky, uneven, or does not fully extend or retract.	Tractor hydraulic fluid is low.	Fill the tractor hydraulic reservoir.
	Air is in the hydraulic system.	Purge the air from the hydraulic system.
	Not properly or fully lubricated	Lubricate the cylinder lube points as needed.
	Cylinder is damaged.	Inspect for cylinder damage. Repair, rebuild, or replace the cylinder as needed. Contact Strobel Mfg for rebuilding service, or a seal rebuild kit.
	Hydraulic hose, quick coupler, or fitting is partially blocked.	Fully relieve hydraulic pressure before service. Inspect components for blockage. Disconnect hoses slowly. Remove obstructions or replace damaged components as required. Wear appropriate eye protection.
	Hydraulic hoses, couplers, or components not properly connected.	Fully relieve hydraulic pressure and verify all connections are correct and secure.
	Faulty hydraulic valve.	Locate and replace the faulty valve.
	Debris is obstructing full movement of the cylinder.	Remove all debris from the cylinder and surrounding components.
	Tractor hydraulic system is open valve or improper.	Pro Graders are standardly designed for closed-valve tractors with compatible hydraulic system and HP: PG 12 = 150–200 HP, PG 14 = 200–250 HP. Contact your Strobel dealer.
Grease zerks will not take grease.	The zerk is plugged.	Remove and replace the grease zerk.
	The zerk pin is frozen.	Remove and replace the pin.
No Grader functions are working.	Transmitter power is not on.	Restore transmitter power.
	The receiver power is not on.	Restore receiver power.
	Power wiring fault or short circuit.	Verify proper 12 VDC positive and negative connections. Locate and repair any wiring faults or short circuits.
	System status fault.	Check the LED status display for fault or error indications and correct the problem.
	Electrical system ground is poor or disconnected.	Verify all ground connections are clean, secure, and properly connected.
	Hydraulic system malfunction.	Check the hydraulic system; correct any problems.

Optional Pro Grader Wireless Control Troubleshooting

Problem	Solution
No operation of all functions when a function switch is activated.	Check the selector switch is in the correct position.
	Check that the transmitter power is ON.
	Check that power is supplied to the receiver.
	Inspect system wiring for proper power input.
	Check the LED status display for system status.
	Check for proper grounding of the system's electrical circuit.
	Inspect the Pro Grader and tractor hydraulic system for problems.
Certain functions do not work.	Inspect the wiring between the control system and the affected valve coil or check the output function that does not work.
	Check the LED status display for system status.
	Use frequency lock and lock to a good channel.
	Check the pro grader and tractor hydraulic system for problems.
	Check the pro grader and tractor electric system for problems.
Function operates intermittently.	Check for loose connections or damage.
	Check LED status display for system status.
	Check receiver antenna for any damage and proper connection.
	Use frequency lock and lock to a good channel.
	Check the pro grader and tractor hydraulic system for problems.

Optional Pro Grader Wireless Control Error Codes

Error	Probable Cause
EC01	RF communication problem.
EC02	Wrong RF ID.
EC03	Low battery.
EC04	Raise output error.
EC05	Lower output error.
EC06	Tilt left output error.
EC07	Tilt right output error.
EC08	Angle left output error.
EC09	Angle right output error.
EC10	Swing left output error.
EC11	Swing right output error.
EC12	Pitch back output error.
EC13	Pitch forward output error.
EC14	Lights output error.

Quick Reference Index

C
Checking the Pro Grader Before Operating or Transporting *23*

I
Installing a Wheel and Applying Correct Lug Nut Torque *38*

L
Lubrication Guide and Schedule *35*

M
Maintenance Schedule *34*

O
Operating Pro Grader Controls *24*
Operating Safety *14*

P
Preparation for Pro Grader Use *18*
Pro Grader Basic Operation *26*

S
Safety *6*

FARM EQUIPMENT MANUFACTURERS ASSOCIATION
FEMA FarmEquip.org
MEMBER

SINCE 1946

Made in America

Since 1946 Strobel Manufacturing has been designing and building innovative, durable products that solve real-world problems. Every piece of equipment is built for rugged daily use – robust and durable. We call it Strobel Strong. Welcome to the Strobel family.

© Strobel Manufacturing, Inc. 2026 | All rights reserved.

Strobel

strobelmfg.com |
sales@strobelmfg.com

105 S. Green Street
Clarks, NE 68628
308.548.2254