SUPER SHADE SERIES

40’ × 40’ Livestock Shade with Two-Piece Tarp

Assembly and Parts Manual



Assembly Instruction Video

DO NOT ASSEMBLE THIS EQUIPMENT UNTIL THIS MANUAL HAS BEEN READ AND UNDERSTOOD.

Part Number: 13500012 R2
Original Instructions

Contents

Protecting the Super Shade from Snow, Ice, and High Winds 3
Safety 4
Safety Alert Symbol and Signal Words 4
General Safety Information 4
Working On or Near This Livestock Shade 5
Assembly 6
40’ x 40’ Super Shade Features 6
General Assembly 6
1 Connect the 8” Top Center Pipe to the Concrete Base and Column 7
2 Connect the End Rafters to the 8” Top Center Pipe 7
3 Install Right and Left Center Half Rafters to the 8” Top Center Pipe and Structure 8
4 Install Tarp Pipes Into Tarp Sleeves 8
5 Roll Up Tarps and Lift Tarps Onto the Structure Center Ridge 9
★ Rolling or Unrolling the Tarp with the Handle 9
6 Install Tarp Pipe Hold Downs at the Center Ridge 10
7 Install 3” End Pipe at the Eaves 11
8 Install the Corner Braces at All Corners 11
9 Install 1” (Gray) Reinforcing Straps 12
10 Unroll Tarps 13
11 Connect Tarp Ratchet with Straps to Hooks and to Tarp Straps, Then Tighten 13
12 Support the Shade on Lifting Equipment and Unbolt It From the Base 14
13 Lift the Shade and Install the Center Section to the Base and Top Center Pipe 14
14 Install Center Braces To the Center Section and Top Structure 15
Replacement Parts List 16
40’ x 40’ Super Shade Main Parts I.D. 16
40’ x 40’ Super Shade Hardware and Select Shurco Parts I.D. 16

Protecting the Super Shade from Snow, Ice, and High Winds

IMPORTANT

- The Livestock Shade is not designed to support any snow or ice load on the tarps. Do not allow any snow or ice to accumulate on the tarp. Doing so will likely cause damage to super shade tarps and potentially other super shade parts.
- Roll up the livestock shade tarps in the Fall before snow or ice arrives. Secure the rolled up tarps to the 8” Top Center Pipe with ratchet straps wound around the rolled up tarps and the 8” Top Center Pipe. Ensure the tarps won’t unroll even in windy conditions.
- When damaging winds are forecasted, roll up the livestock shade tarps before the wind arrives.

Safety

Safety Alert Symbol and Signal Words



- This safety symbol indicates an important safety message in this manual.
- When you see this symbol, be alert to the possibility of injury or death.

Signal Words: Be aware of the signal words **DANGER**, **WARNING**, **CAUTION**, and **NOTICE**. These signal words indicate a level of safety risk.

⚠ DANGER Indicates extremely imminent hazards where death or serious injury will result if these hazards are not avoided.

⚠ WARNING Indicates hazards at hand where death or serious injury likely could occur if these hazards are not avoided.

⚠ CAUTION Indicates hazards at hand where personal injury likely may occur if these hazards are not avoided.

NOTICE Used to convey important information that is not related to personal safety, such as maintenance, cleaning guidelines, avoiding implement damage, and the like.

GS-0001

General Safety Information



All safety information in this manual is essential and is intended to assist in identifying and preventing incidents that could cause injury, death, or property damage. *Read, understand, and follow this manual and all safety instructions before operating, maintaining, or working near this equipment.*

- **Safety is your responsibility.** As the owner, operator, or supervisor you need to know and be alert to the specific requirements, precautions, and hazards that exist and to make these known to all personnel working with the equipment or in the equipment area, so they too may take any necessary safety precautions that may be required.
- **Prevent accidents by anticipating the result before the accident is caused.** As an owner, operator, or supervisor you are responsible.
- **Allow only experienced personnel to assemble or work on this equipment.** Persons assembling or working on this product need to be trained and familiar with this type of equipment.
- **Never use the equipment for purposes or applications it is not designed for.**
- **Never use any equipment that is damaged or has become unsafe.**
- **Always follow all local codes and regulations.**
- **Contact your Strobel Manufacturing dealer or sales representative if you need additional information.**

GS-0004

Working On or Near This Livestock Shade

⚠ WARNING Construction and Structure Safety



- Ensure the shade or components can't fall on anyone.
- Do not modify the structure.
- Using unauthorized or modified parts is prohibited.



- Never build, work on or work near the structure in wind or other unsafe weather or conditions.



- Lift heavy objects safely with lifting equipment only.
- Do not do any unsafe lifting of components.

⚠ CAUTION Use Personal Protective Equipment

Always wear proper personal protective clothing and equipment appropriate for each task.



- Wear eye protection around eye hazards.



- Wear a hard hat for head protection.



- Wear coveralls for extra skin and tissue protection.



- Wear steel-toe boots for toe and foot protection.



- Wear work gloves to protect hands from sharp edges.

⚠ CAUTION Prepare for Emergencies



- Keep a properly stocked first aid kit nearby.



- Keep an emergency contact list for medical, fire, rescue services nearby and on your phone.

Assembly

⚠ WARNING Strobel Manufacturing is not responsible for lifting safety, lifting method instructions, or construction safety. Those assembling the shade are solely responsible. Always ensure the super shade and its components are lifted and supported safely. Always follow all safety instructions!

40’ x 40’ Super Shade Features

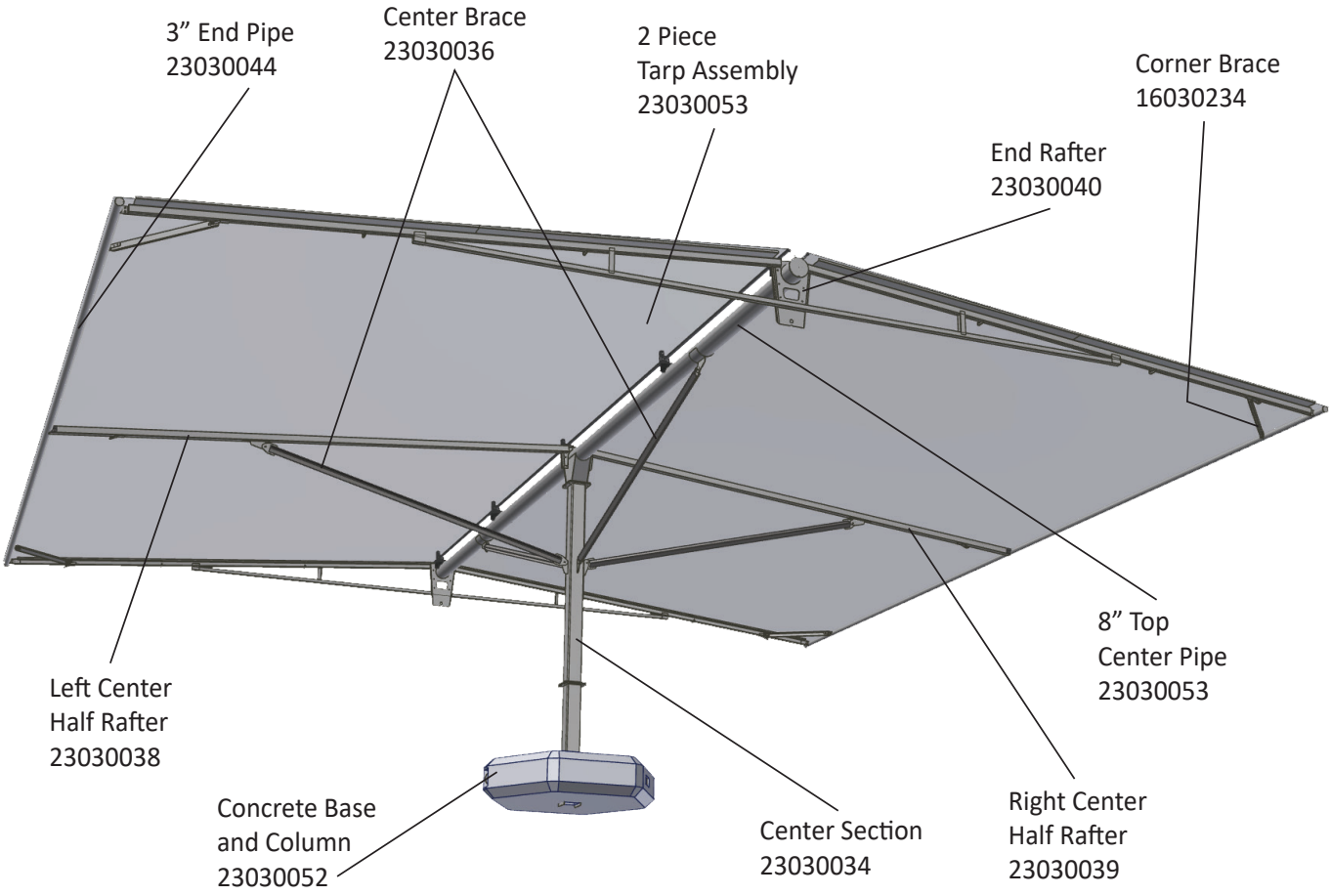

General Assembly

Note

- Often aligning the 8” top center pipe parallel to the concrete base fork pocket tubes makes transport easier. However, aligning the pipe at a 90° orientation to the tubes is also acceptable. It is a choice of preference.
- Many builders find it helpful to lay out the super shade components near their intended installation locations before starting assembly. Do what works best at your jobsite. **See the Parts I.D. on page 16.**

1 Connect the 8” Top Center Pipe to the Concrete Base and Column

To facilitate assembly, temporarily secure the 8” top center pipe and structure (23030053) to the concrete base and column (23030052) with four 5/8” x 2” flange bolts and 5/8” flange lock nuts.

- 5/8” x 2” Flange Bolt x4
  02060016
- 5/8” Flange Lock Nut x4
  14060002

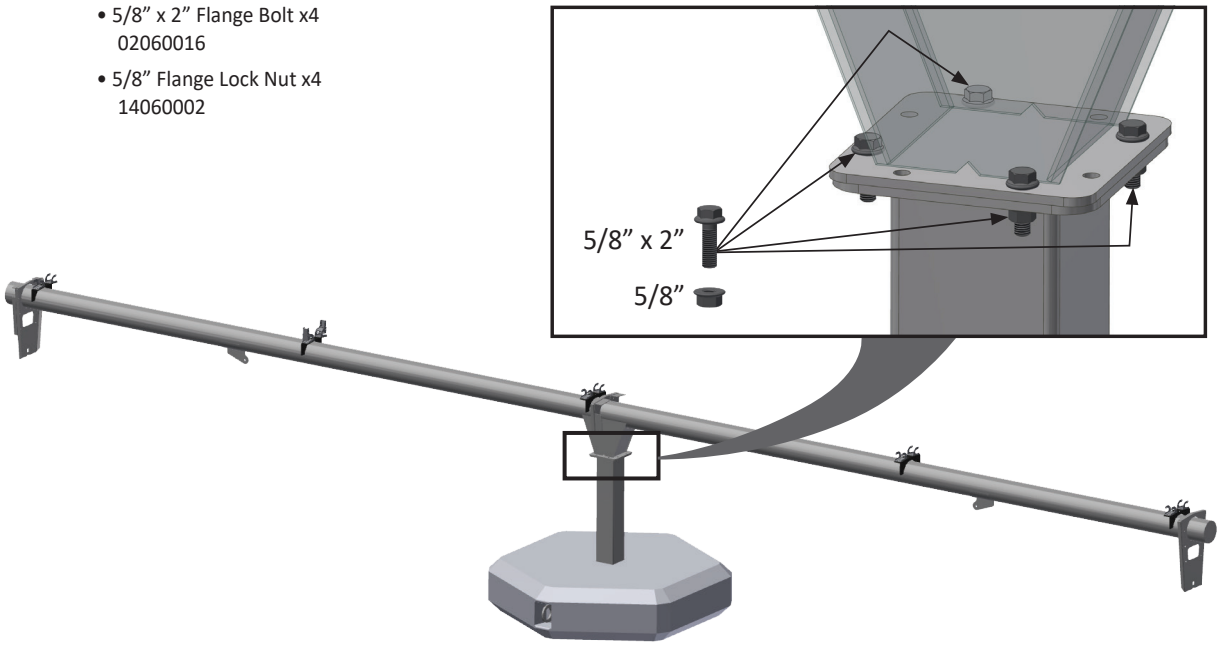

2 Connect the End Rafters to the 8” Top Center Pipe

Install the end rafters (23030040) to the 8” top center pipe (23030053) and structure with 7/16” x 1-1/2” flange bolts and 7/16” lock nuts.

- 7/16” x 1-1/2” Flange Bolt x6
  02060019
- 7/16” Flange Lock Nut x6
  14060017

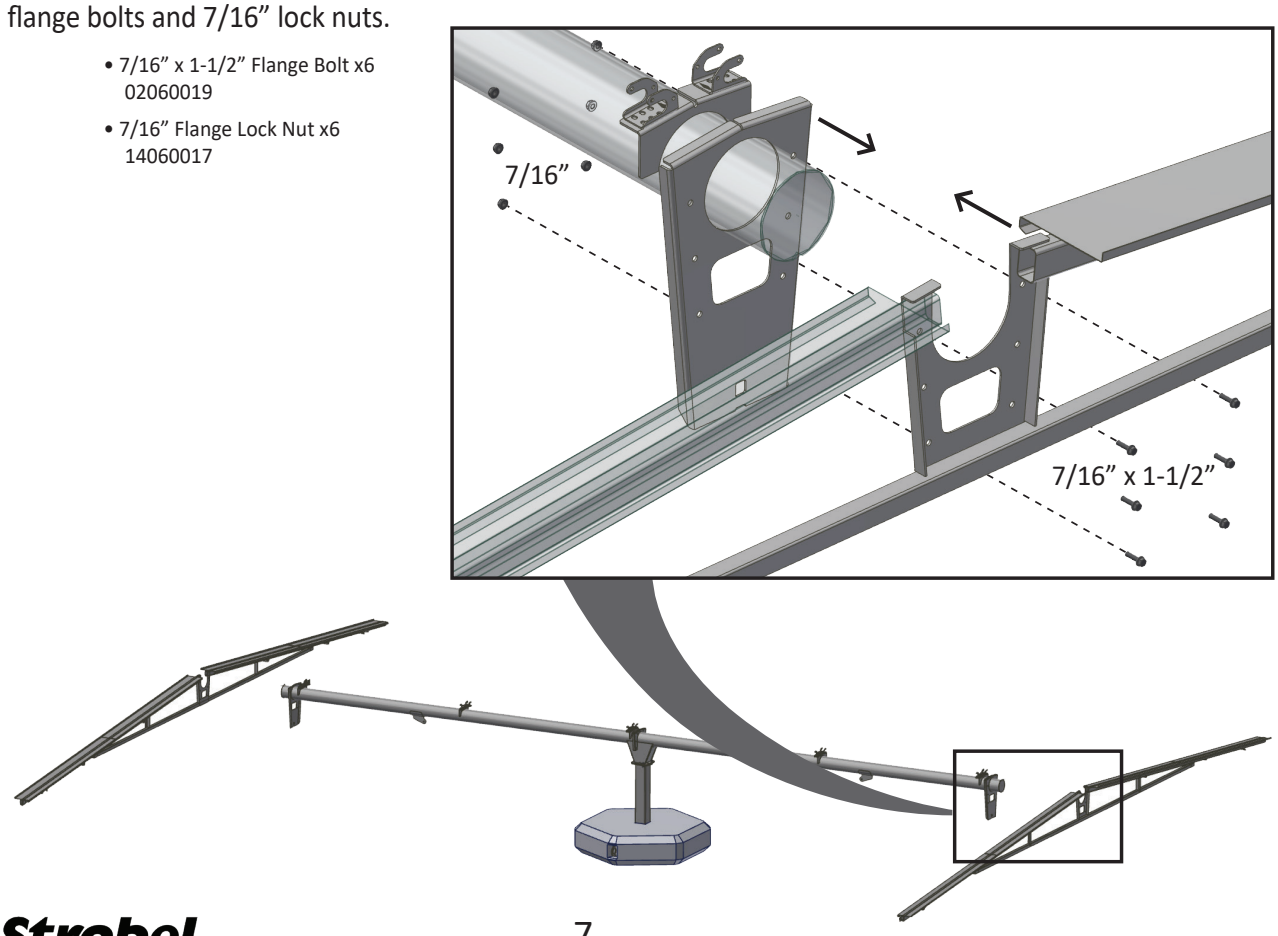

3 Install Right and Left Center Half Rafters to the 8” Top Center Pipe and Structure

Install the Left (23030038) and Right (23030039) center half rafters to the 8” top center pipe (23030037) and structure with 7/16” x 1-1/2” flange bolts and 7/16” flange lock nuts.

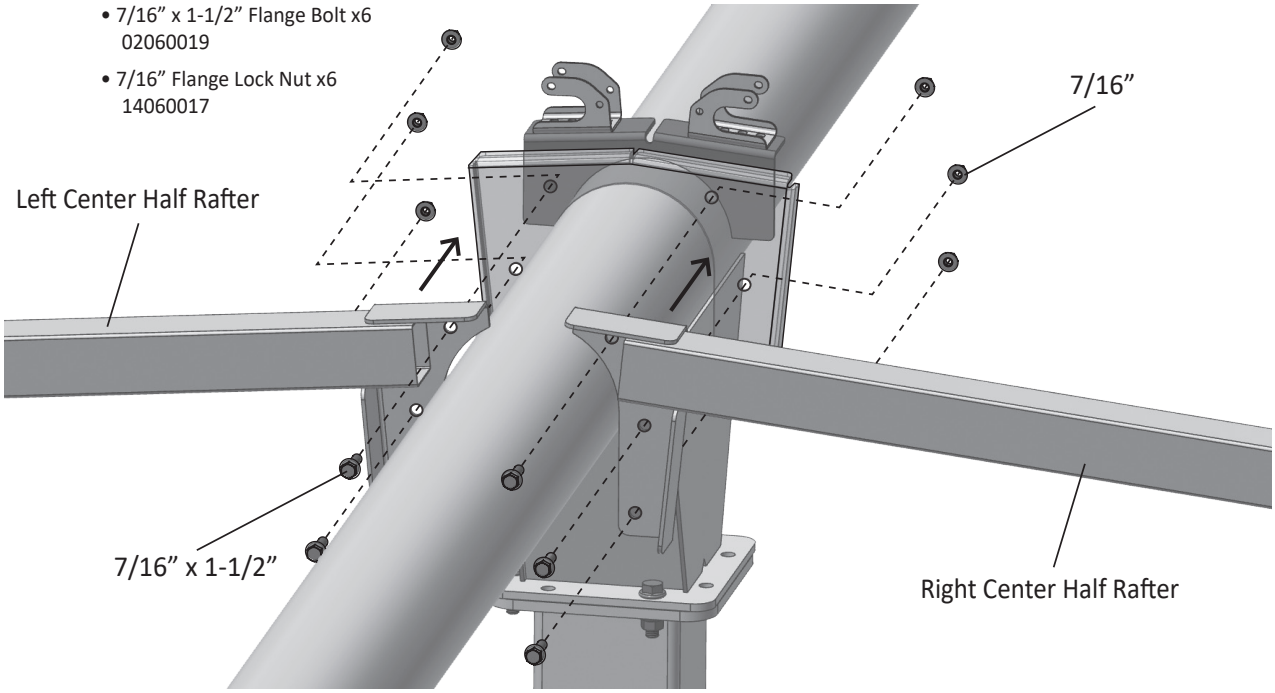

4 Install Tarp Pipes Into Tarp Sleeves

Lay tarps flat near the super shade with strap sewn sides facing up towards the sky. Insert and center 1-1/4” welded tarp pipes (23030043) into eave sleeves and 1-1/8” non-welded tarp pipes (20000506) into peak sleeves. Stretch out tarp sleeves smoothing out all wrinkles. Starting 40” from the tarp edge, attach plastic equally spaced half-moon clamps through sleeves to pipes using #10 x 3/4” self-drilling screws.

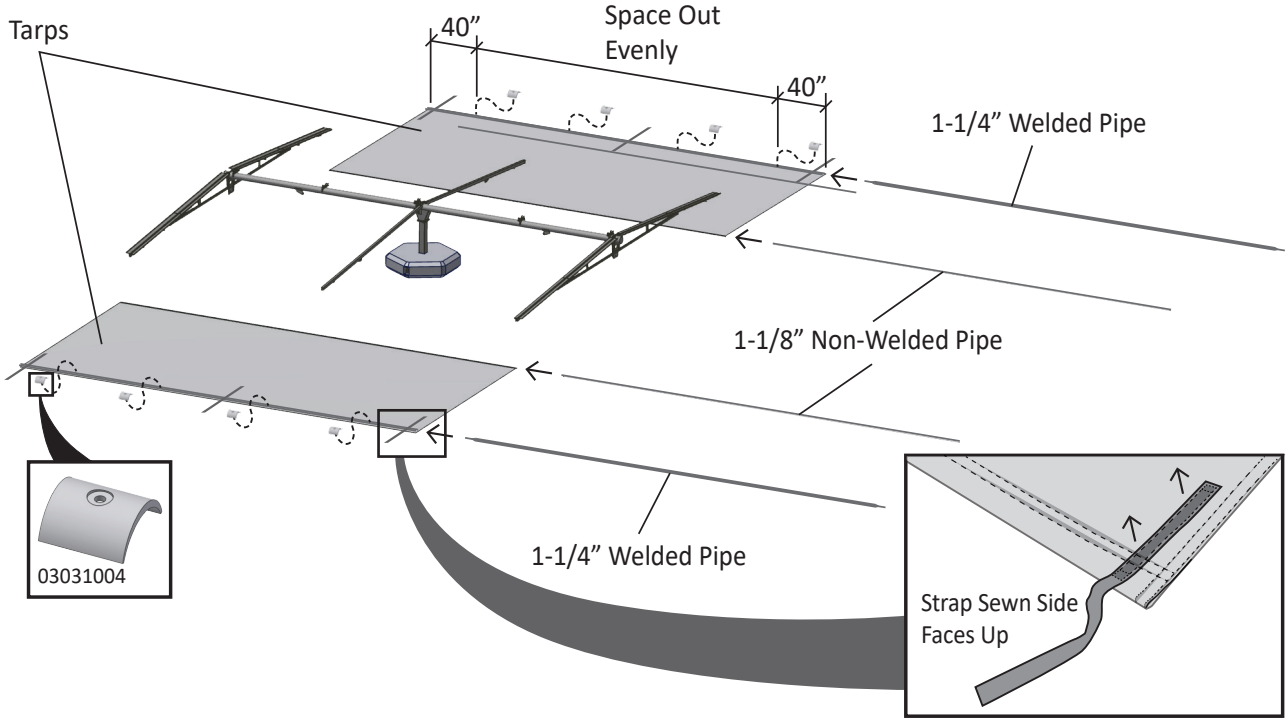

5 Roll Up Tarps and Lift Tarps Onto the Structure Center Ridge

Roll up tarps starting from the outer eave sleeves and rolling towards the inner sleeves. Safely lift tarps onto the structure center ridge.

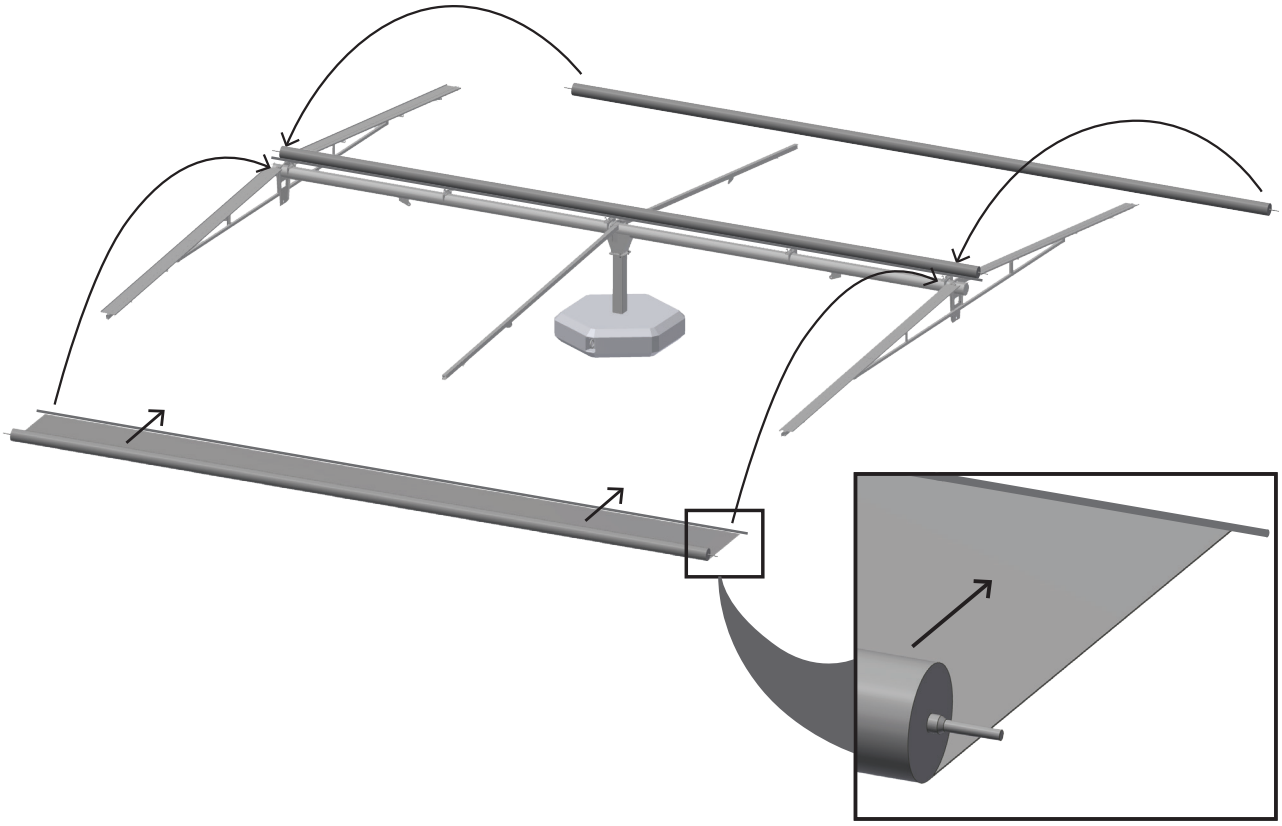

★ Rolling or Unrolling the Tarp with the Handle

Whenever you need to use the handle to roll or unroll the tarp, ascend to working height safely using proper height access equipment. Choose equipment that meets or exceeds safety ordinances in your location and OSHA. (1) Attach the handle to the 1-1/4” welded tarp pipe end using the handle clevis pin. Then, (2) roll or unroll the tarp.

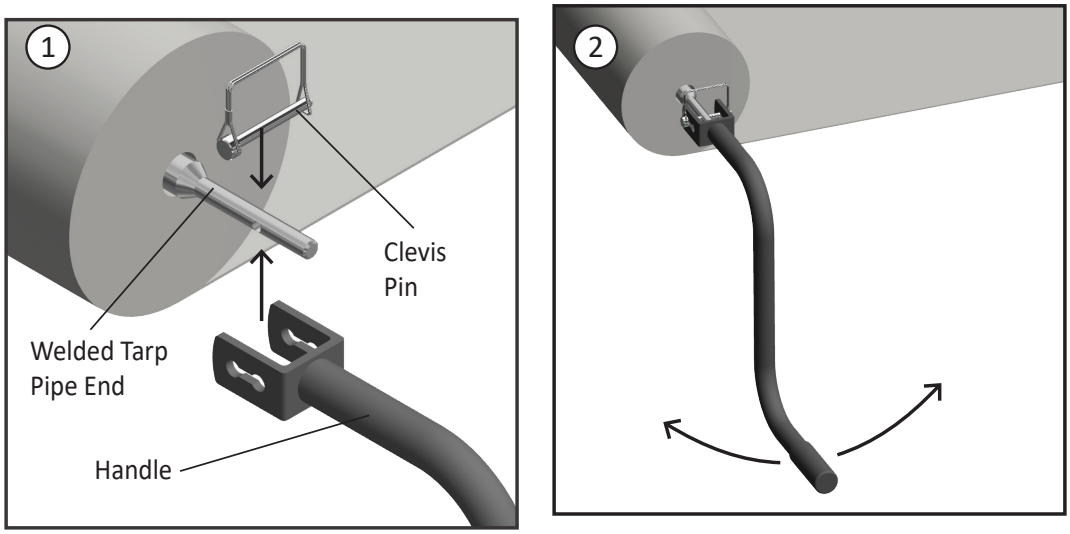

6 Install Tarp Pipe Hold Downs at the Center Ridge

Install the tarp pipe hold-down into each tarp stop bracket by inserting the innermost clevis pin through the innermost bracket and hold-down holes. See below. Secure the clevis pin with a bow-tie cotter pin.

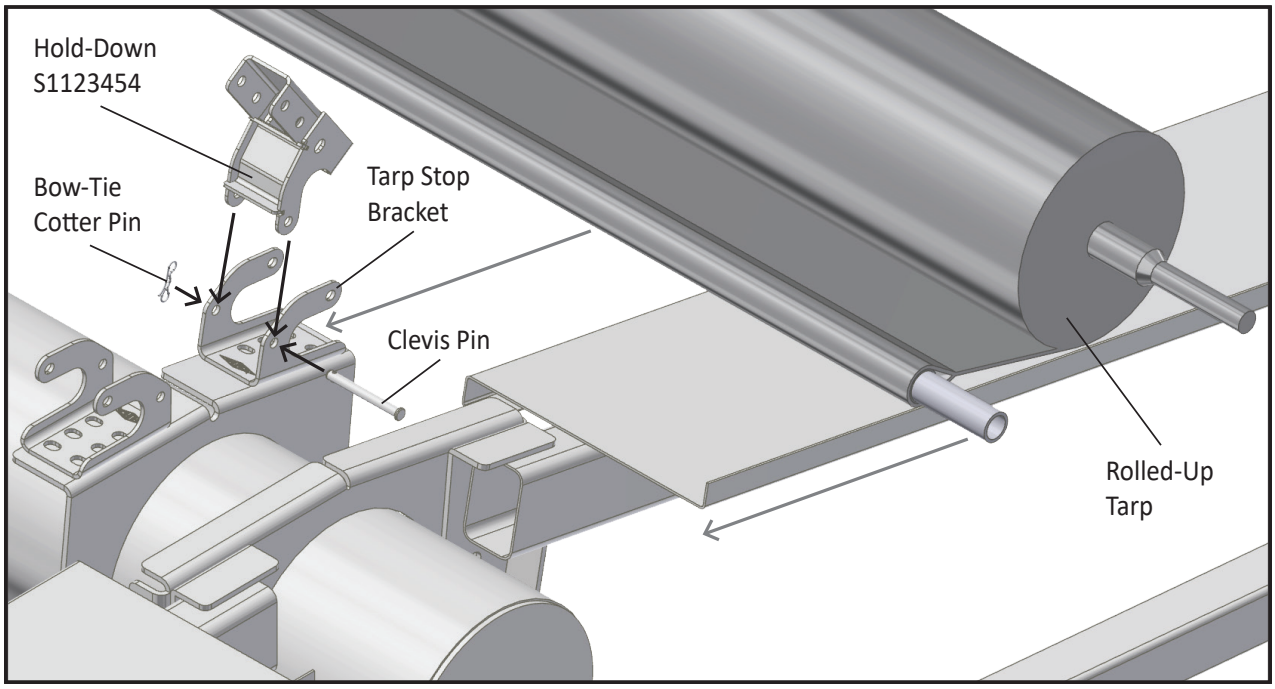

Slide the 1-1/8” tarp pipe and tarp sleeve into the bracket and hold-down and then rotate the hold-down and secure the tarp pipe into position with another clevis pin and bow tie cotter pin.

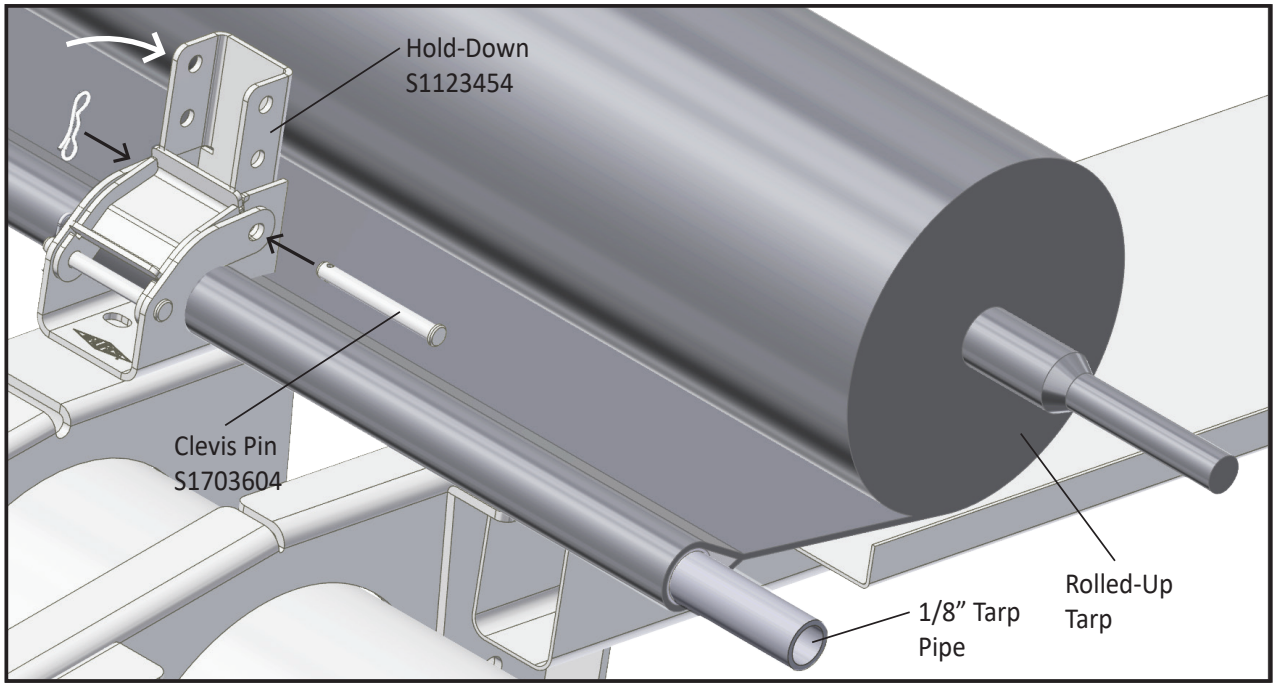

7 Install 3” End Pipe at the Eaves

Install 3” end pipes at both super shade eave locations. Secure corners with 7/16” x 1-1/2” flange bolts (02060018) and flange nuts (14060018), and use 1/2” x 4” flange bolts (02060015) for the center connection.

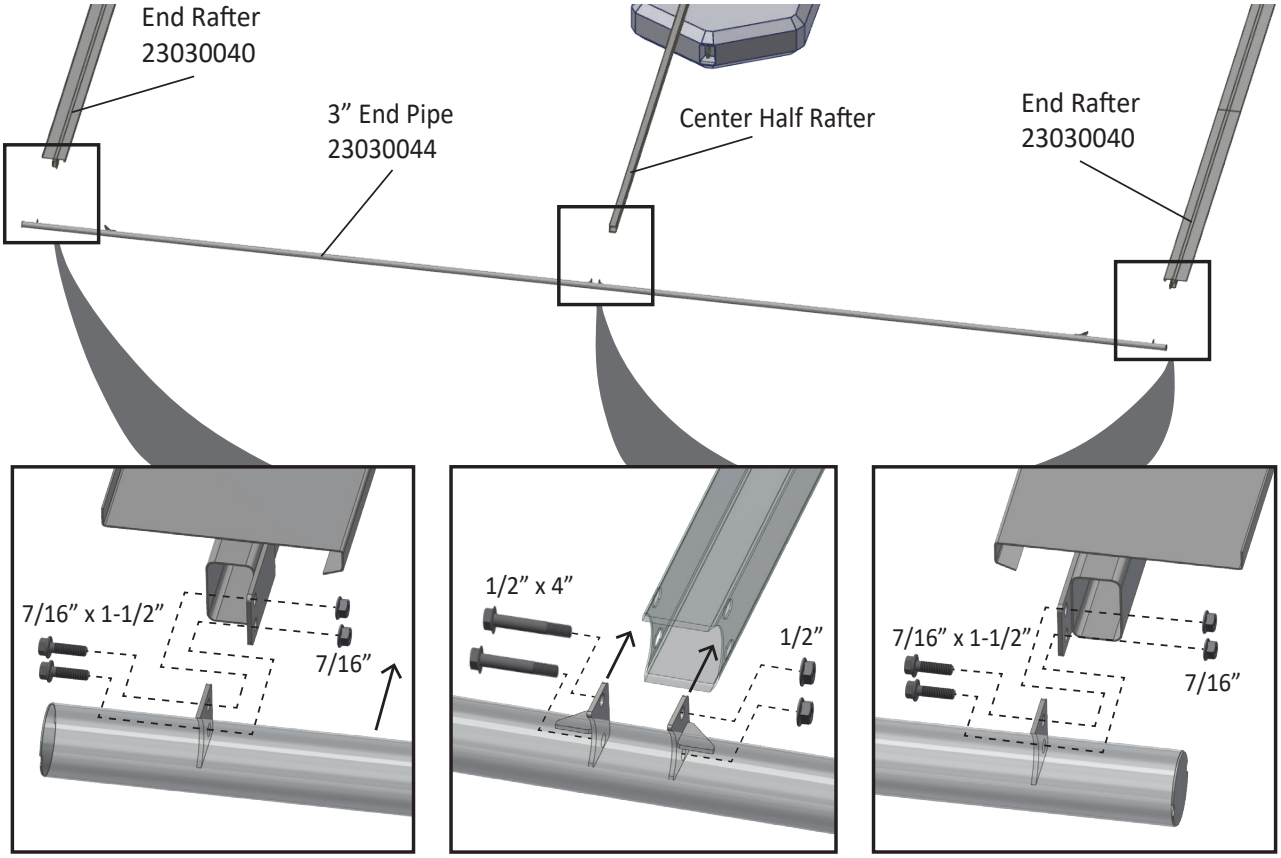

8 Install the Corner Braces at All Corners

At each corner, install a corner brace (16030234) to the tabs on the end rafter and 3” end pipe. Use 3/8” x 1” flange bolts (02060019) and 3/8” flange nuts (14060017).

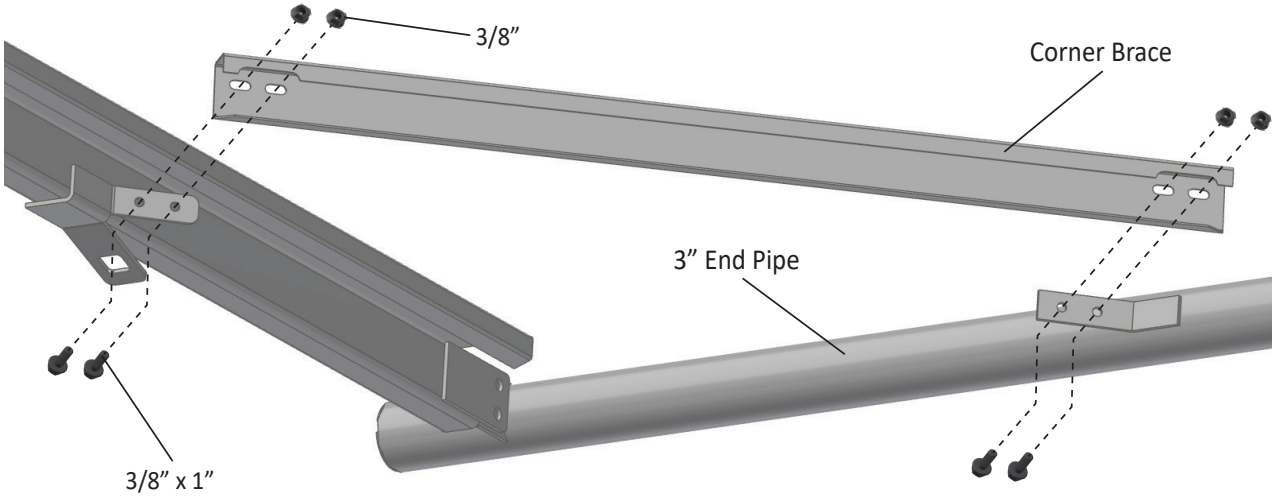

9 Install 1” (Gray) Reinforcing Straps

Install 1” straps (S1101682) across the super shade frame. Install straps and ratchet these tight as shown.

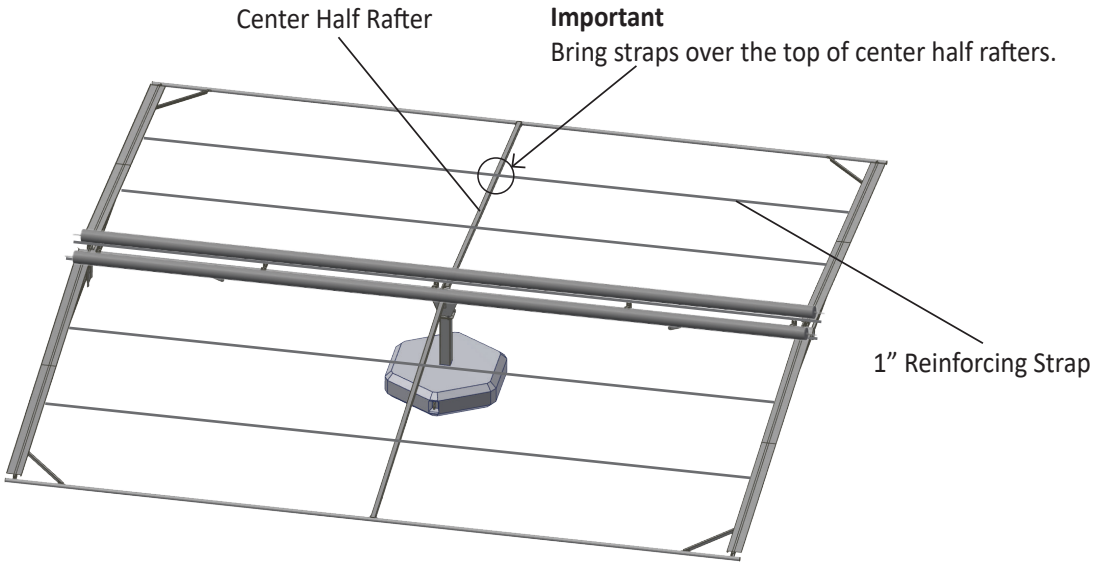

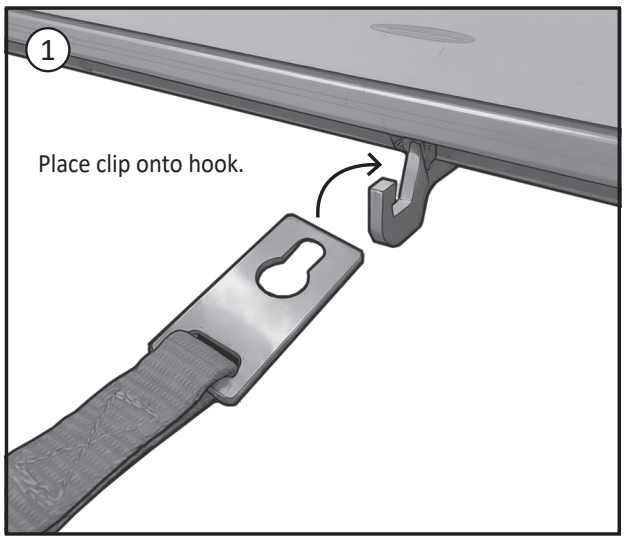

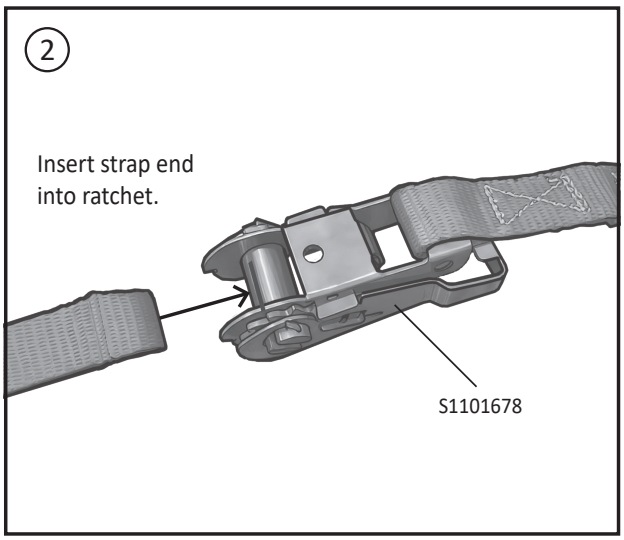

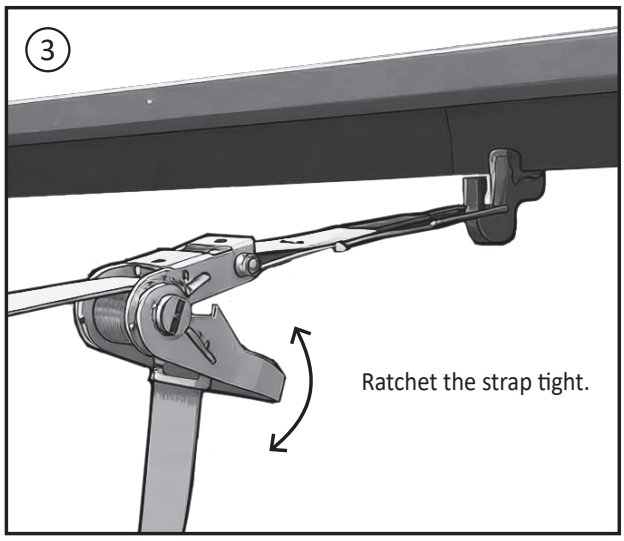

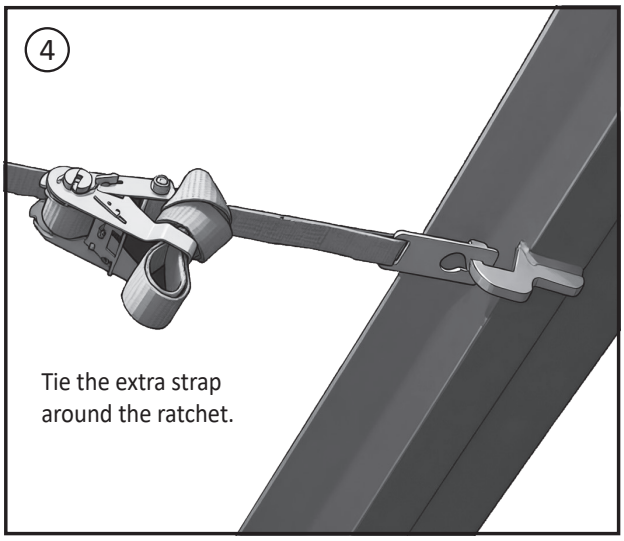

10 Unroll Tarps

Unroll the tarps and pull them around the 3” End pipes. Unroll tarps by hand using 2 persons or unroll using the handle connected to the welded tarp pipe. Stretch the tarp out towards each end so there’s no wrinkles.

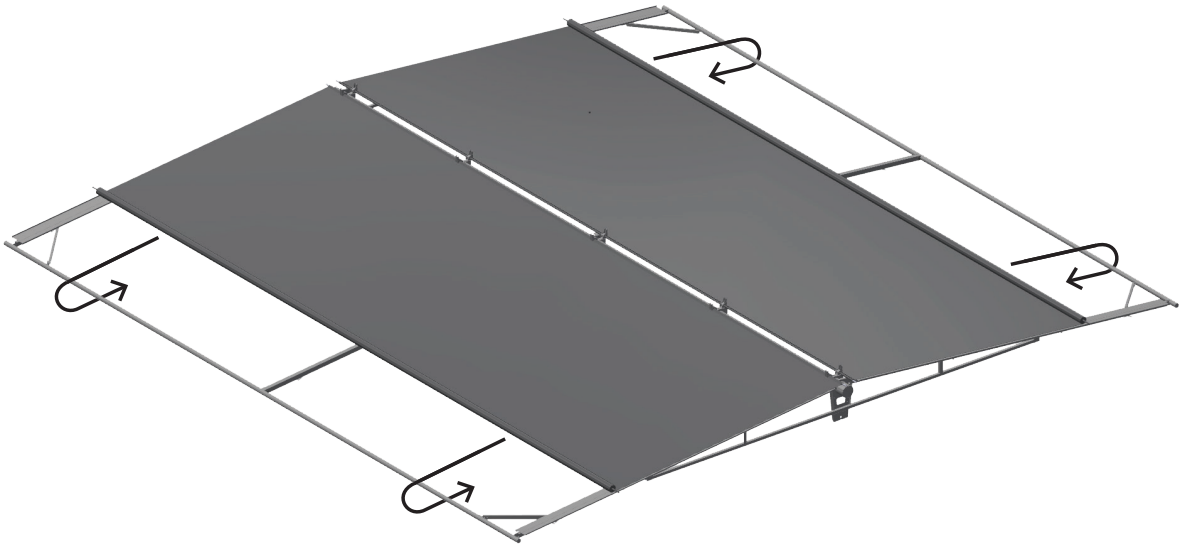

11 Connect Tarp Ratchet with Straps to Hooks and to Tarp Straps, Then Tighten

At the super shade corners and at the half rafter ends, install tarp ratchet hooks to the frame clips. Install the tarp straps into the ratchets. Then tighten the ratchets so the tarp is secure, snug, and wind-ready.

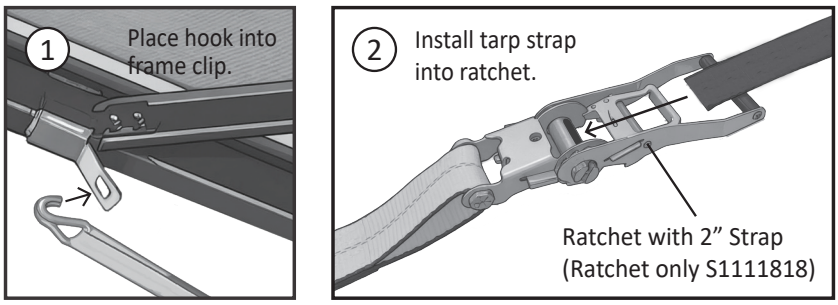

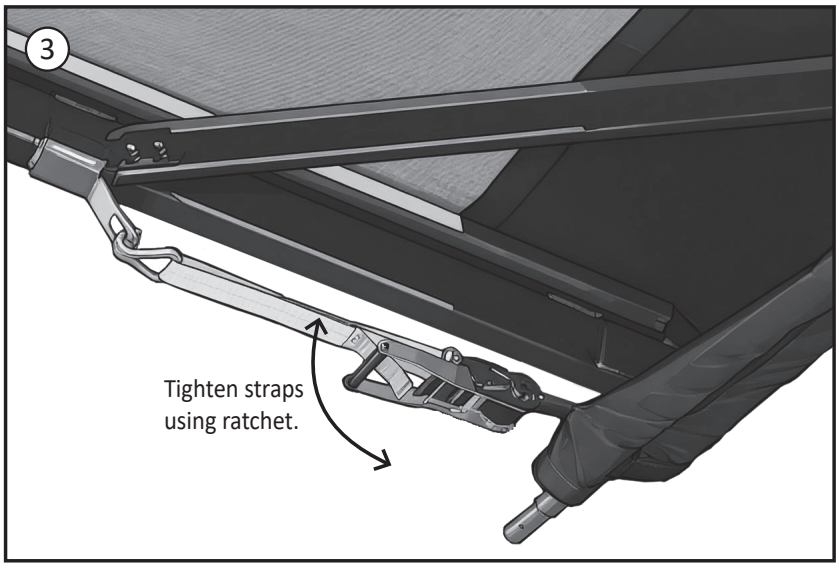

12 Support the Shade on Lifting Equipment and Unbolt It From the Base

First, fully and safely support the super shade on the lifting equipment. Then, unbolt it from the concrete base and column, preparing the shade for lifting.

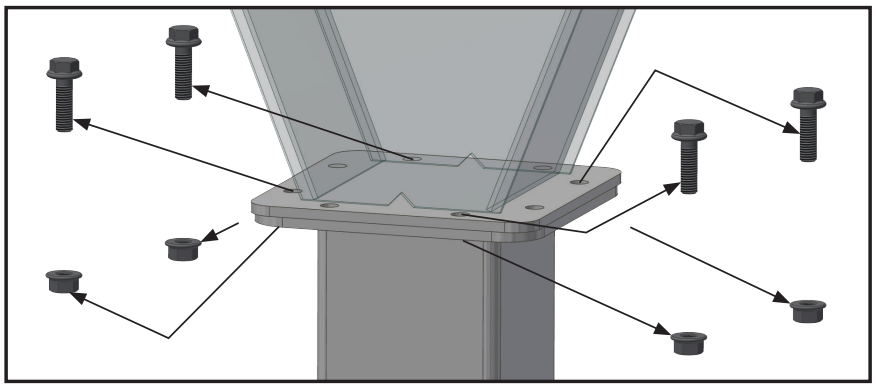

13 Lift the Shade and Install the Center Section to the Base and Top Center Pipe

Safely lift the shade using proper equipment, ensuring no one stands beneath it. Once at assembly height, keep it safely supported. Then, fasten the center section to the base column and top structure using 5/8” x 2” flange bolts and 5/8” flange lock nuts. Fill all bolt holes and tighten all bolts.

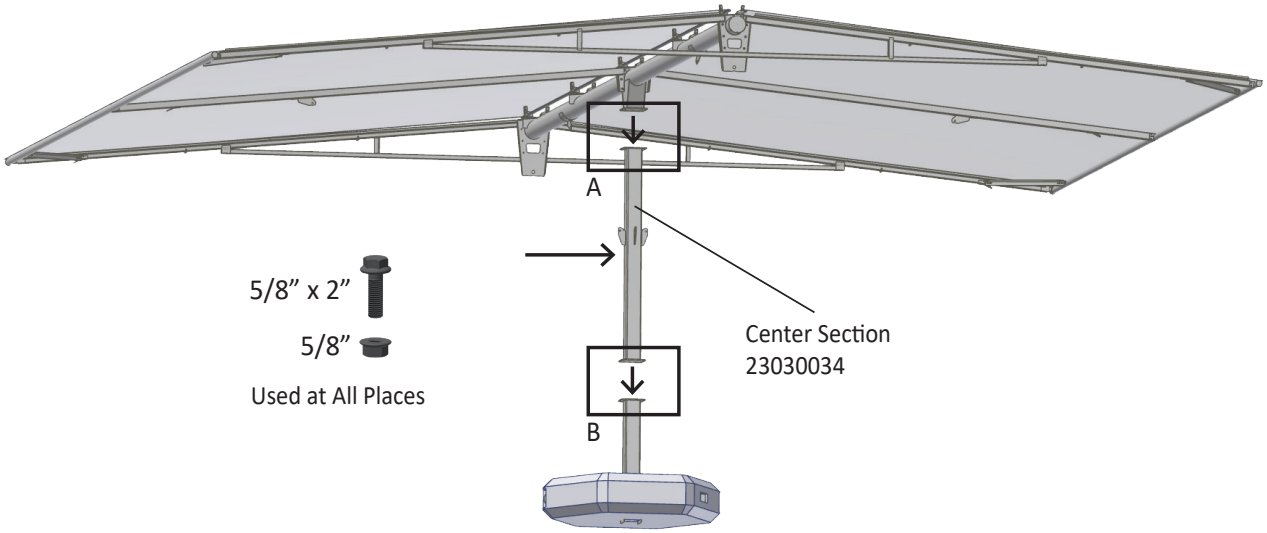

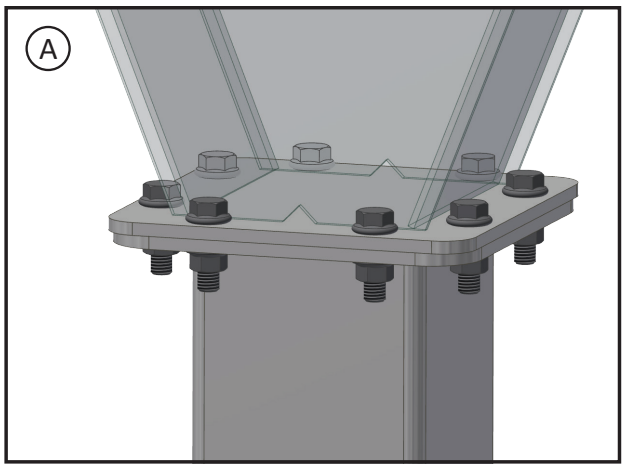

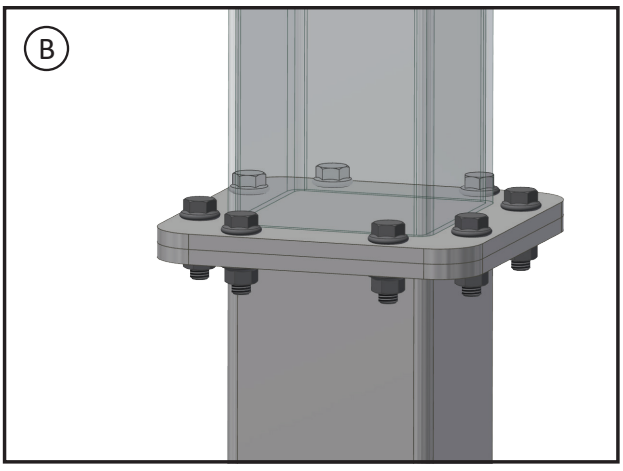

14 Install Center Braces To the Center Section and Top Structure

Install four Center Braces, connecting each to the Center Section and Top Structure. Make the connections using 5/8” x 2” flange bolts and 5/8” flange lock nuts at all connection points. Then tighten all bolts.

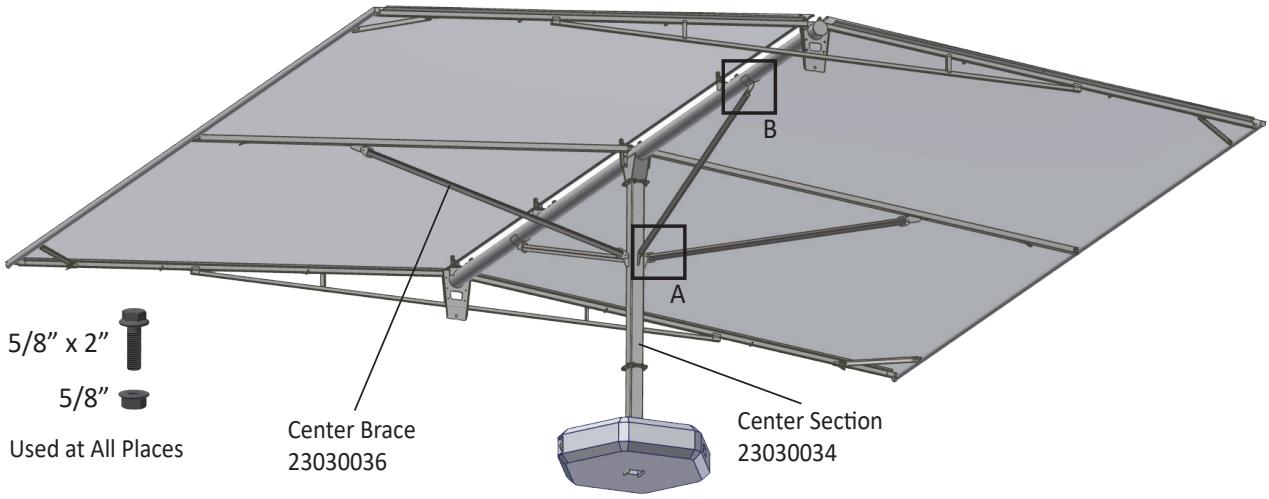

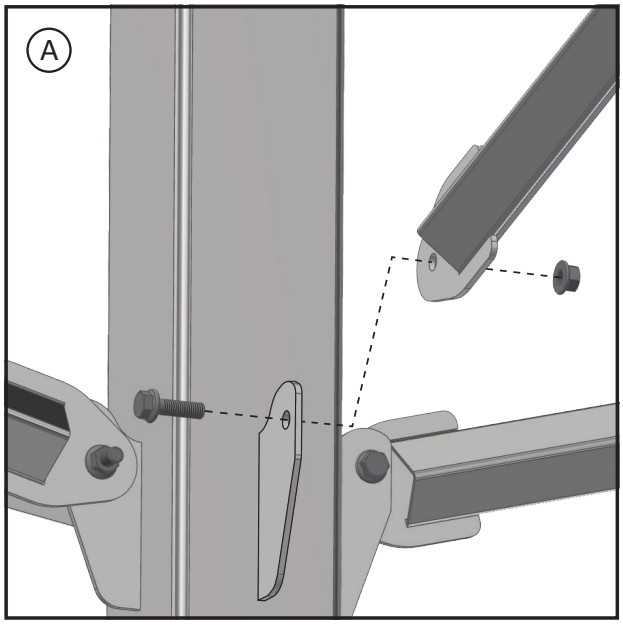

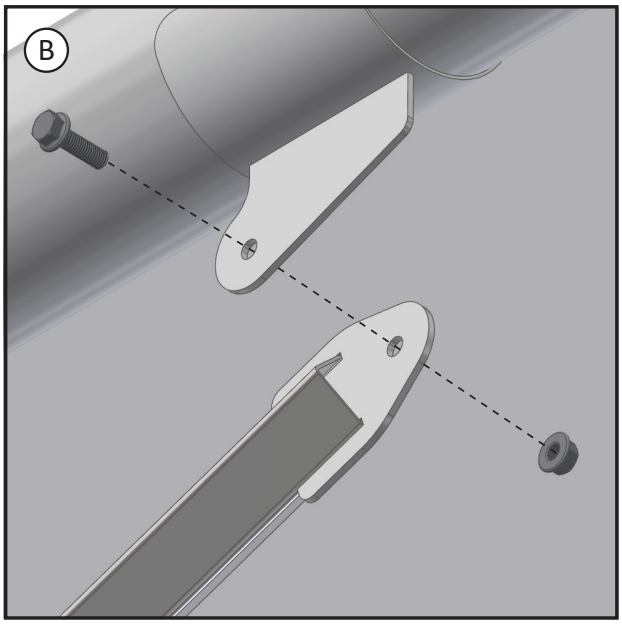

Ensure all components are installed and all bolts and straps are adequately tightened. The super shade is now complete and ready to be moved into location for use.

Replacement Parts List

40’ x 40’ Super Shade Main Parts I.D.

1-1/8” Non-welded Tarp Pipe (20000506) Qty (2)

1-1/4” Welded Tarp Pipe (23030043) Qty (2)

3” End Pipe (23030044) Qty (2)

8” Top Center Pipe (23030053) Qty (1)



Center Brace (23030036) Qty (4)



Concrete Base and Column (23030052) Qty (1)



Center Section (23030034) Qty (1)



Corner Brace (16030234) Qty (4)

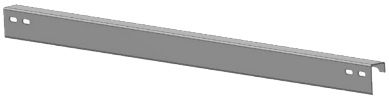

End Rafter (23030040) Qty (2)



Left Center Half Rafter (23030038) Qty (1)



Right Center Half Rafter (23030039) Qty (1)



40’ x 40’ Super Shade Hardware and Select Shurco Parts I.D.

3/8” x 1” Flange Bolt (02060019) Qty (16)
3/8” Flange Nut (14060017) Qty (16)
7/16” x 1-1/2” Flange Bolt (02060018) Qty (26)
7/16” Flange Lock Nut (14060018) Qty (26)
1/2” x 4” Flange Bolt (02060015) Qty (6)
1/2” Flange Lock Nut (14060005) Qty (6)
5/8” x 2” Flange Bolt (02060016) Qty (24)

5/8” Flange Lock Nut (14060002) Qty (24)
Half-Moon Clamp and 3/4” x #10 Self Tapping Screw (03031004) Qty (8 each in a package)
2” Wide Ratchet Strap with Ratchet (19181016) Qty (6)
1” Reinforcing (Gray) Straps (S1101682) Qty (4)
Ratchet for 1” Strap (S1101678)
40’ Shade 2 Piece Tarp (19199011) Qty (1) (2 tarps)

FARM EQUIPMENT MANUFACTURERS ASSOCIATION
FEMA FarmEquip.org
MEMBER

SINCE 1946

Made in America

Since 1946 Strobel Manufacturing has been designing and building innovative, durable products that solve real-world problems. Every piece of equipment is built for rugged daily use – robust and durable. We call it Strobel Strong. Welcome to the Strobel family.

© Strobel Manufacturing, Inc. 2026 | All rights reserved.

Strobel

strobelmfg.com |
sales@strobelmfg.com

105 S. Green Street
Clarks, NE 68628
308.548.2254